SKYTABLE
Slab Table

Assembly Instructions for Standard Configuration

Edition 01 | 2009

Contents

Overview
Overview 1

Introduction
Standard configuration 4
Intended use 4
Safety instructions 5
Additional PERI product information 5

A0 Abbreviated version of the assembly
Example: table size 18.00 m x 6.00 m 6

A1 Storage and transportation
Pallets 8
Beam Truss ST 9
Lifting Traverse STL 120 9
Lifting Mechanism STM 9

A2 Assembly
Table combinations with 2 truss sections 10
Truss Girder STT 12
Quick Lowering Device STQ 13
Truss Connector STC 14
Diagonal Brace STD 14
Spreader Tube STST 14
Lifting Traverse STL 266/207-2 15
Lifting Traverse STL 120-2 15
Crane Eye Adaptor STA 16
GT 24 Girder 16
Mounting STG 24 16
Formlining 17
Guardrail 18
MULTIPROP Slab Props 19
Element for width compensation 20

A3 Shuttering
Placing the table 21
Concreting 21

A4 Compensations
Width compensation 22
Length compensation 23
Table extensions 50 to 90 cm 23

A5 Striking
Preparation 24
Lowering Device STN 25

A6 Moving
Hydraulic Lowering Device STN 26
Bracing 26
Rear Carriage STR 150 27
Rear Carriage STR 296/237 27
Single Roller STE 27
Triple Roller ST 27
Lifting Mechanism STM 28
Lifting Head STH 29
Table: minimum crane hook height 29
Moving procedure 30
Positioning the SKYTABLE table with the crane 32
Positioning the SKYTABLE table without the crane 33

A7 Special applications
SKYTABLE table L = 6.00 m 34
SKYTABLE table L = 9.00 m 34
Asymmetrical tables 35
Storey heights ≥ 5.15 m 36
Table combinations with 3 truss sections 37
SKYTABLE table with 3 truss sections 38
Beams 40
Missing support for the MULTIPROP 41

Tables
Prop loads 42
Formlining 43

Components
Components 46

Key

Safety Instructions | Note | Visual Check | Tip | Load-bearing point

Overview

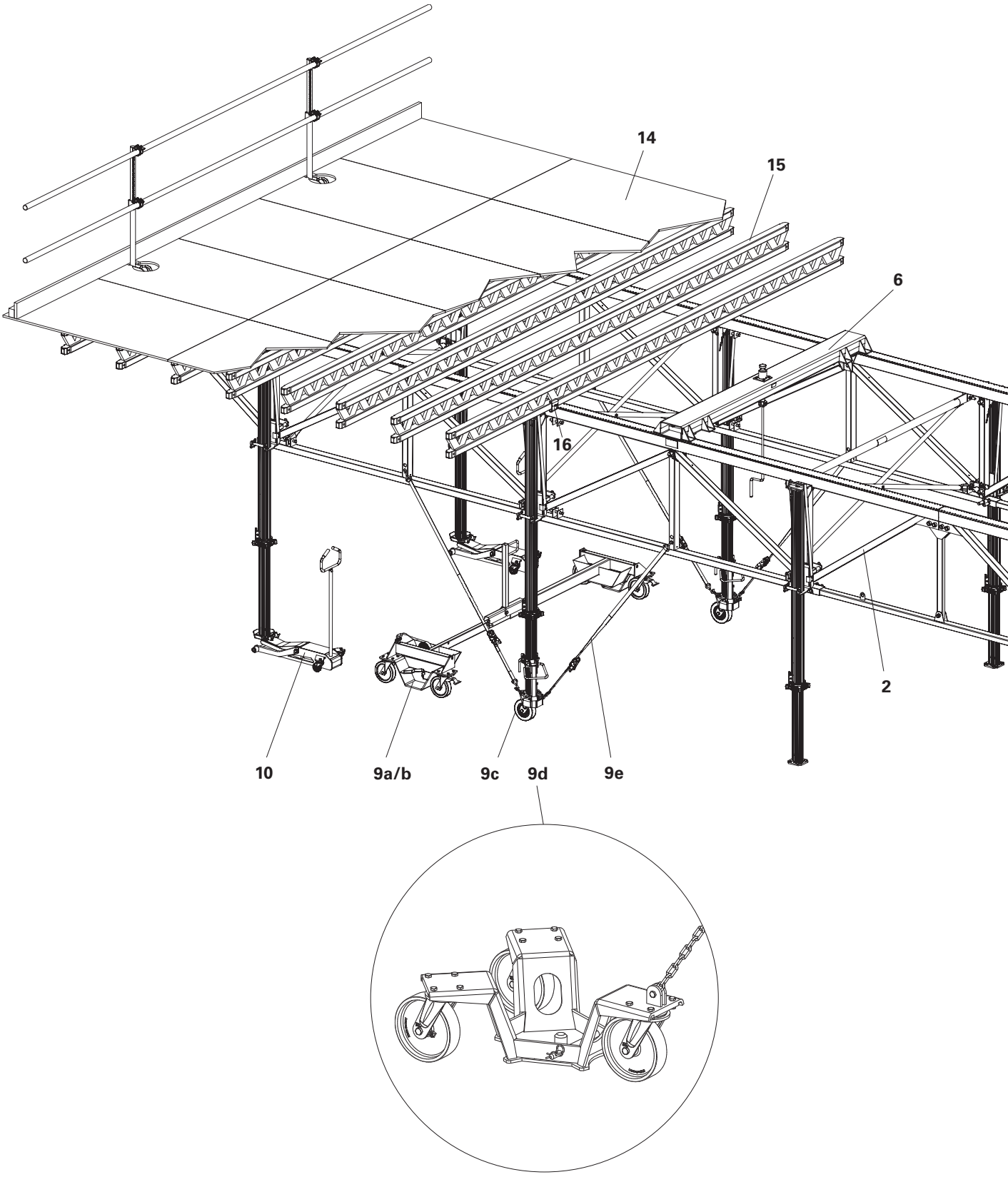

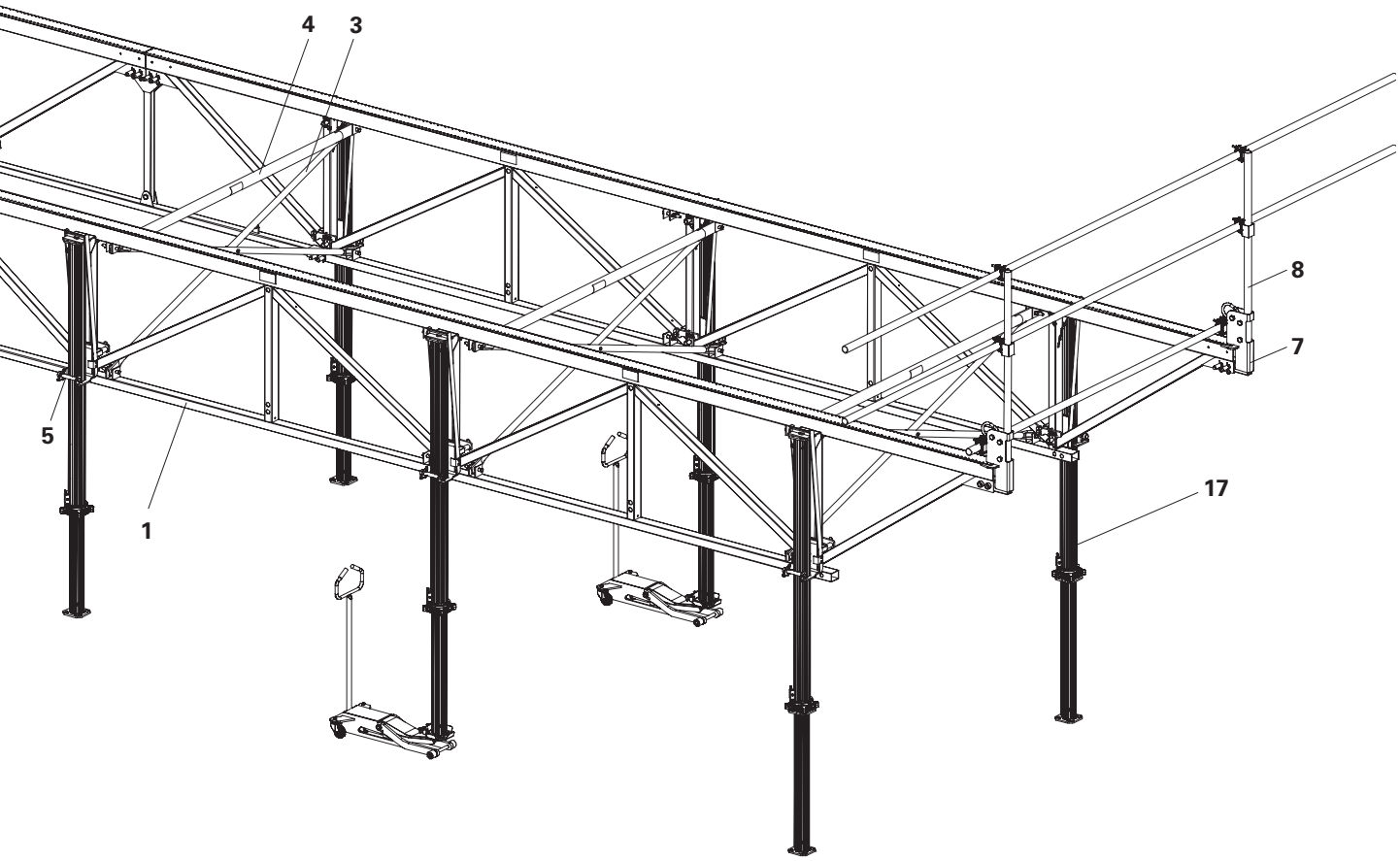
4
3
8
7
5
1
17

Overview

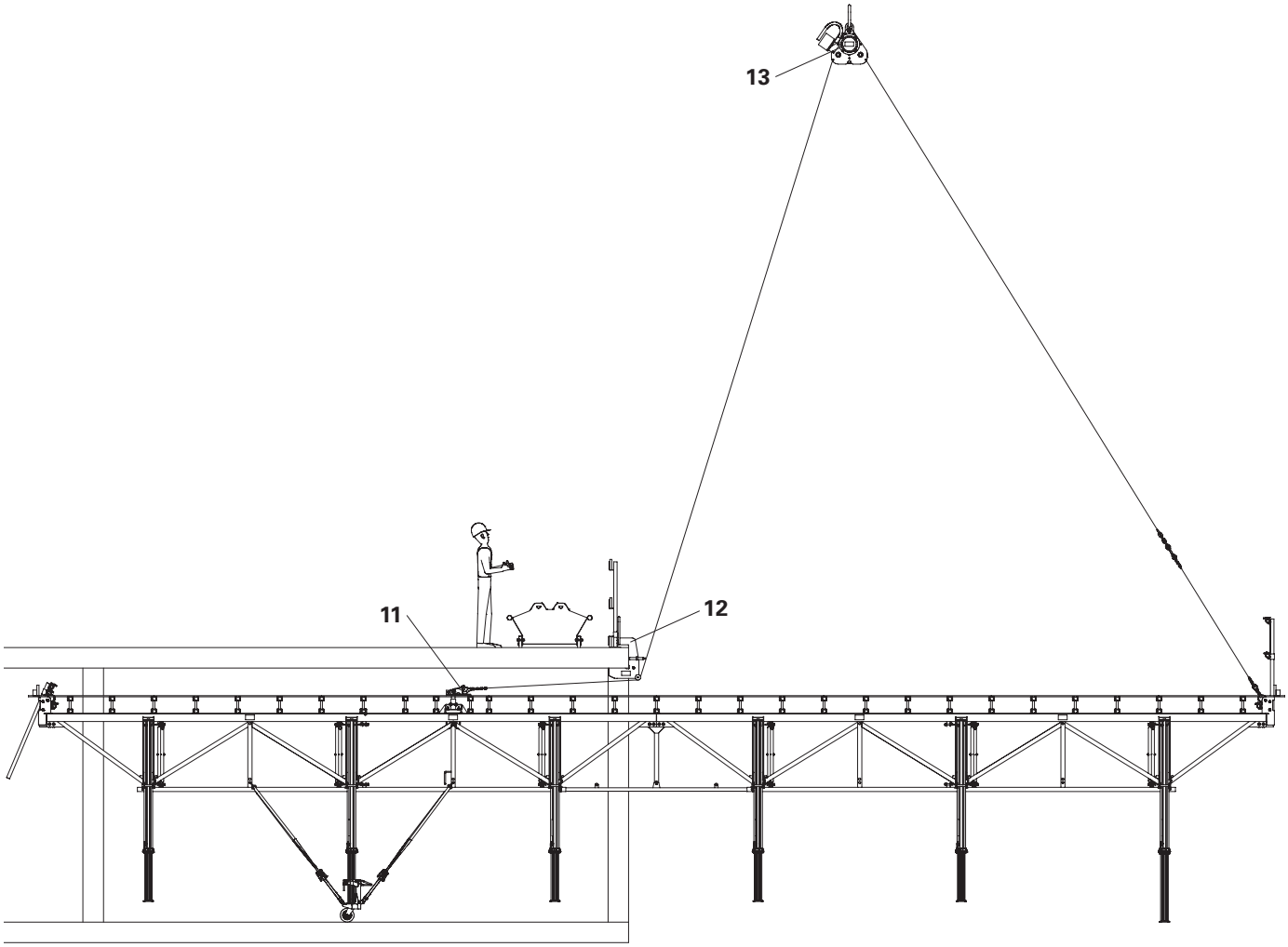

1	Truss Girder STT	8	Guardrail Post STP	11	Lifting Head STH
2	Truss Connector STC	9a	Rear Carriage STR 296/237-2	12	Chain Guidance Shoe STMS
3	Diagonal Brace STD	9b	Rear Carriage STR 150-2	13	Lifting Mechanism STM
4	Spreader Tube STST	9c	Single Roller STE	14	Formlining
5	Quick Lowering Device STQ	9d	Triple Roller ST	15	Girder GT 24
6	Lifting Traverse STL	9e	Tension Belt STLB	16	Mounting STG 24
7	Crane Eye Adaptor STA	10	Hydraulic Lowering Device STN	17	MULTIPROP Prop

Introduction

Standard configuration

General
The structures presented in these assembly instructions are shown in the form of examples with only one component size. They are valid accordingly for all component sizes contained in the standard configuration.

Features
The PERI SKYTABLE large-format truss table is used to create cast-in-place slabs up to a thickness of approx. 40 cm. The tables are planned according to individual project requirements and assembled on the construction site. The table size depends on the buildings geometry and is limited by the maximum 6 t dead weight of the table.
The tables consist of steel truss girders and are arranged in pairs (standard design) or in threes which represent the main supporting element of the tables. The tables are braced in a lateral direction using diagonal braces and spreader tubes. The plywood formlining is supported by GT 24 formwork girders.

The formlining can be selected according to project requirements. Concrete loads are transferred by means of the PERI MULTIPROP props which are laterally mounted with quick lowering devices to the trusses.
With larger storey heights, the PERI MULTIPROP system is used for supporting the tables.

Moving the tables is carried out by means of formwork carriages which are mounted to the MP props, and the Lifting Mechanism STM with integrated chain hoist. With the Lifting Mechanism STM, the tables are operated by remote control when moving out and held in a horizontal position. At the same time, the operator is always in a safe and secure position on the concreted slab.

Main components
Truss Girder STT 168, 592, 888.
Truss Connector STC.
Diagonal Brace STD 120, 207, 266.
Spreader Tube STST 120, 207, 266.
Quick Lowering Device STQ.
MULTIPROP 250, 350, 480.

System dimensions
A. With 2 x truss girder sections
(shown in the following, 18.0 x 6.0 m)
Table length: 6.00 - 24.00 m
Table width: 1.80 - 6.00 m

B. With 3 x truss girder sections
Table length: 9.00 - 15.00 m
Table width: 6.00 - 9.00 m

Technical Data
Permissible slab thicknesses and available prop loads: see PERI Tables.

Intended use

1. PERI products are exclusively technical working materials which are intended for commercial use by technically competent users only.

2. These assembly instructions serve as the basis for the project-related risk assessment and the instructions for the provision and use of the system by the contractor (user). However, they do not replace these.

3. Only PERI original components may be used. The use of other products and spare parts represents a misapplication with associated safety risks.

4. The components are to be inspected before each use to ensure that they are in perfect condition and function correctly.

5. Changes to PERI components are not permitted and represent a misapplication with associated safety risks.

6. Safety instructions and permissible loads must be observed.

7. Components provided by the contractor must conform with the characteristics required in these assembly instructions as well as all valid construction guidelines and standards.

In particular, the following apply if nothing else is specified:
- Timber components: Strength Class C24 for Solid Wood EN 338.
- Scaffold tubes: galvanised steel tubing with minimum dimensions Ø 48.3 x 3.2 mm according to EN 12811-1:2003 4.2.1.2.
- Scaffold tube couplings according to EN 74.

8. Deviations from the standard configuration may only be carried out after a separate risk assessment has been done by the contractor (user). On this basis, appropriate measures for the working safety and stability are to be implemented.

Introduction

Safety instructions

General
1. Deviations from the standard configuration and/or intended use present a potential safety risk.

2. All country-specific laws, standards and other safety regulations are to be taken into account when are products are used.

3. During unfavourable weather conditions, suitable precautions and measures are to be implemented in order to guarantee working safety and stability.

4. The contractor (user) must ensure the stability throughout all phases of construction. He has to ensure and verify that all loads which occur are safely transferred.

5. The contractor (user) has to provide safe working areas for site personnel which are to be reached via safe access means. Areas of risk must be cordoned off and clearly marked. Hatches and openings on accessible working areas must be kept closed during working operations.

6. For better comprehensibility, detailed representations are partly incomplete. The safety installations which have possibly not been shown in these detailed descriptions must nevertheless be available.

Storage and transportation
1. Do not drop the components.

2. Store and transport components so that no unintentional change in their position is possible. Detach lifting gear from the lowered units only if these are in a stable position and no unintentional change is possible.

3. When moving, components are to be picked up and set down so that any unintentional toppling over, falling apart, slipping or rolling are avoided.

4. Use only suitable load-carrying equipment to move the components as well as the designated load-bearing points.

5. During the lifting and moving procedure, ensure all loose parts are removed or secured.

6. During the moving procedure, always use a guide rope.

7. Move components only on clean, flat and sufficiently load-bearing surfaces.

System-specific
1. Retract components only when the concrete has sufficiently hardened and the person in charge has given the go-ahead for striking to take place.

2. Anchoring is to take place only if the anchorage has sufficient concrete strength.

3. During striking, do not tear off the formwork elements with the crane.

4. The existing prop loads (see tables) must be safely transferred by means of sufficiently load-bearing slab props or tower systems.

5. When storing heavy items on the formwork, the load-bearing capacity must be taken into consideration.

6. Cantilevers may only be accessed after bracing has been mounted.

7. The horizontal fixed position of the slab formwork must be guaranteed. This is given with circumferential walls and pre-concreted beams. Otherwise the transfer of the horizontal loads must be guaranteed by means of other measures supplied by the contractor, e.g. bracing.
Load assumptions for horizontal loads in accordance with DIN EN 12812.

Additional PERI product information

- SKYTABLE brochure
- MULTIPROP assembly instructions
- PERI design tables
- Instructions for Use for Lifting Mechanism STM
- Instructions for Use for Hydraulic Lowering Device STN 6.0 t
- Instructions for use for Hydraulic Lowering Device STN 2.0 t
- Instructions for Use for pallets and stacking devices

A0 Abbreviated version of the assembly

Example:
Size of table 18.00 x 6.00 m
For a detailed description,
see A2 Assembly.

Truss Girder STT and bracing

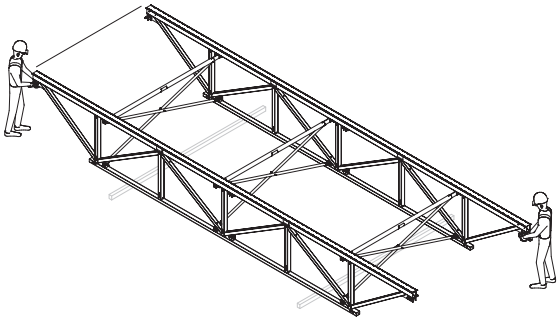

Quick Lowering Device STQ

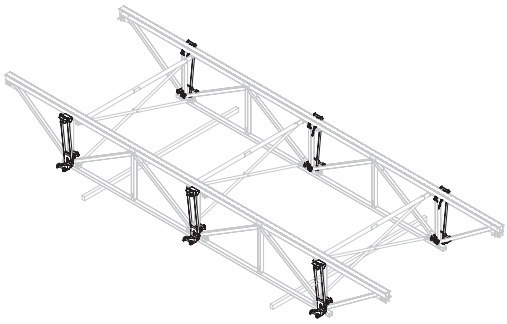

Lifting Traverse STL

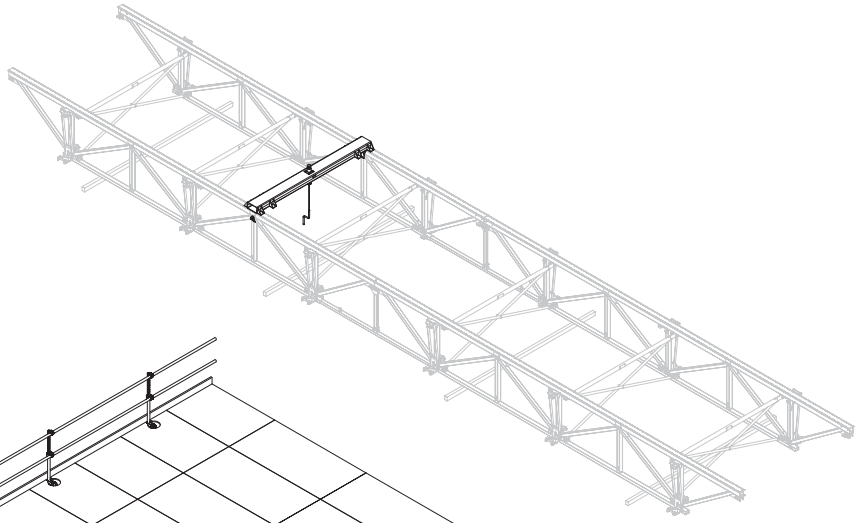

Complete table

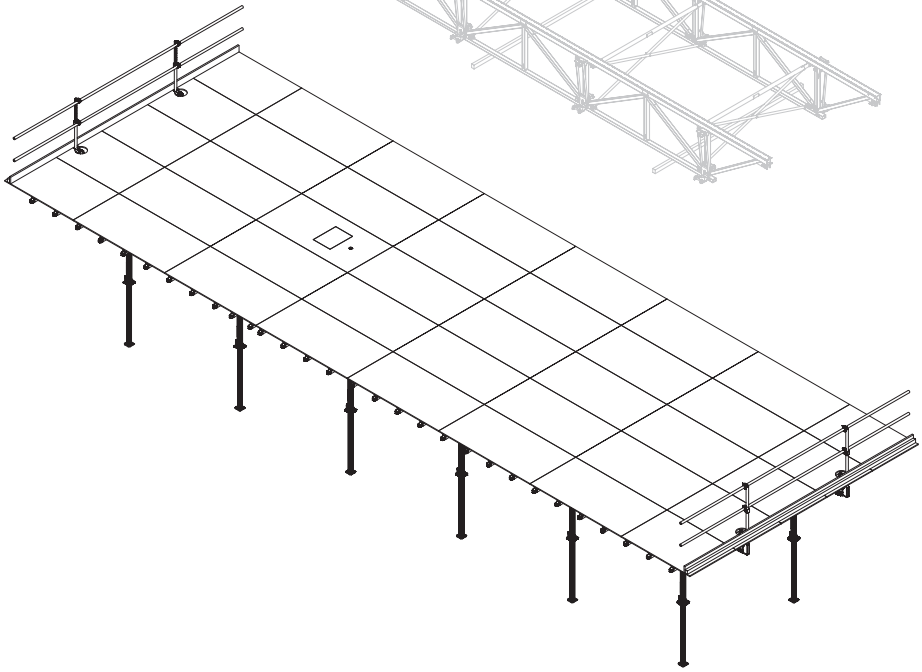

A0 Abbreviated version of the assembly

Example:
Size of table 18.00 x 6.00 m
For a detailed description,
see A6 Moving.

Lifting Mechanism STM and
Chain Guidance STMS

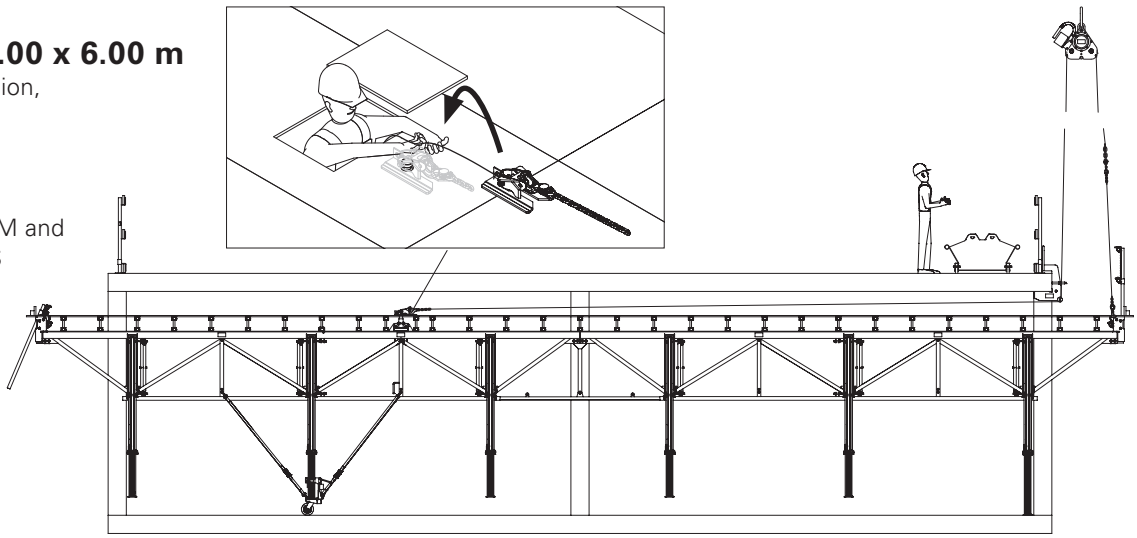

Extending

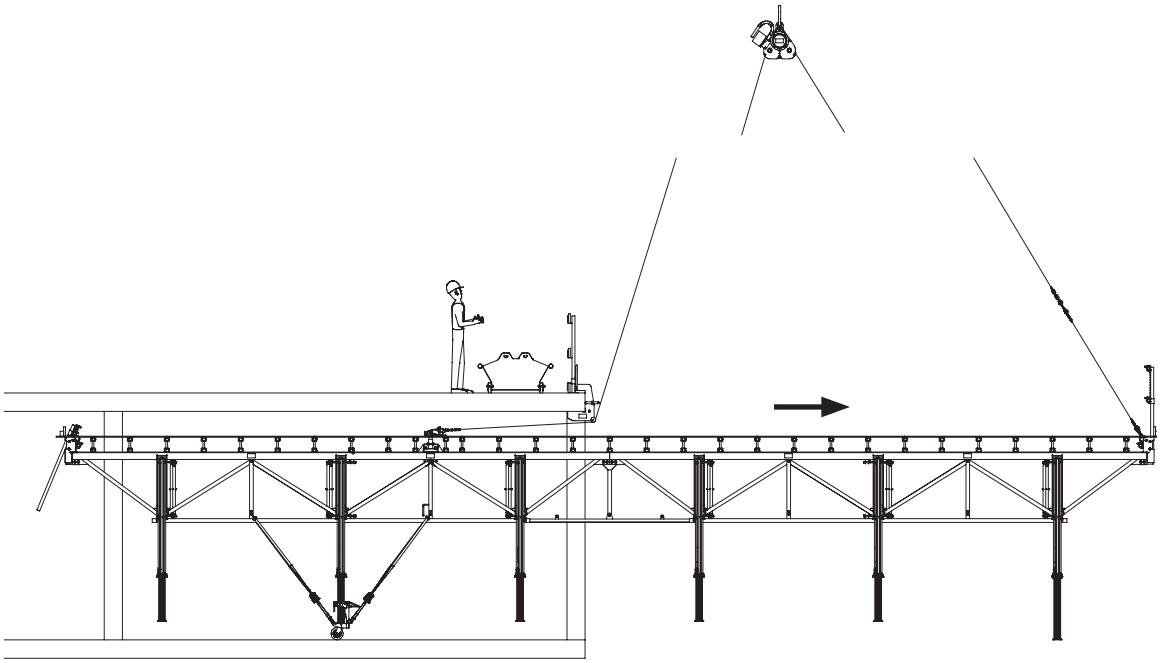

Moved

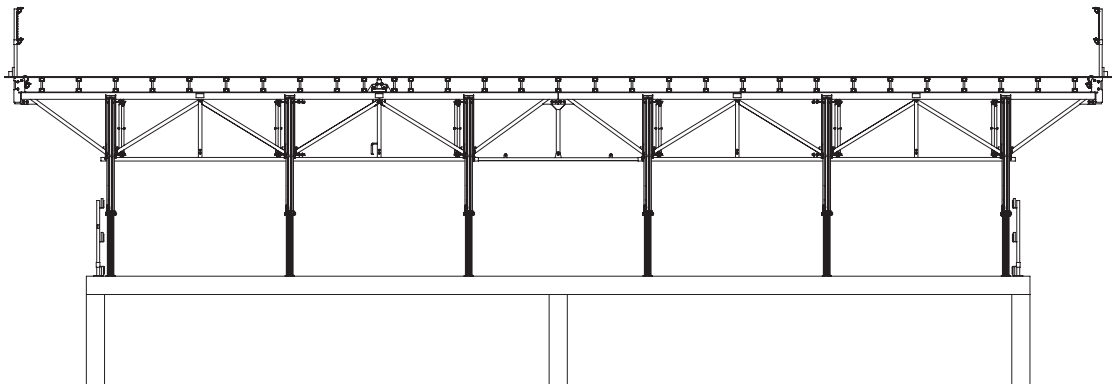

A1 Storage and transportation

Pallets

Instructions for Use for PERI pallets and stacking devices must be taken into consideration!
Manually-created transport units must be correctly stacked and secured!
Pallets and stacked components are to be protected against the effects of the weather, e.g. secure packed components with tension straps against lifting!

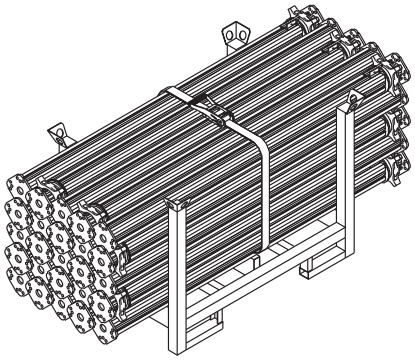

Transportation
PERI pallets and stacking devices are suitable for lifting with a crane or forklift. They can also be moved with the PERI pallet lifter.

The following are just some examples.

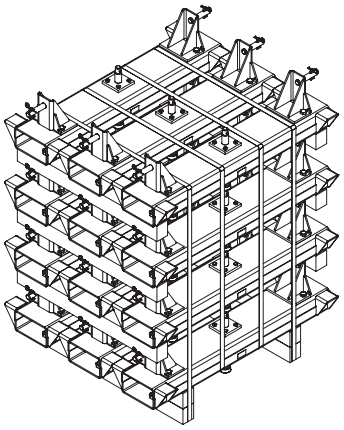

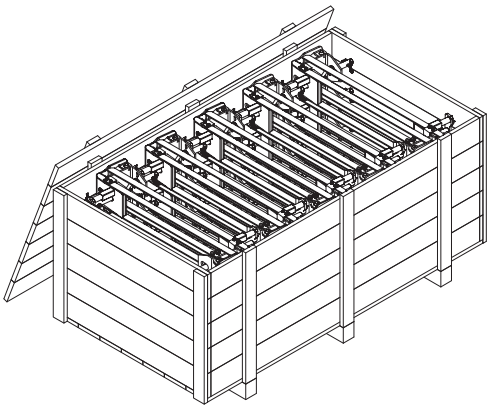

A1 Storage and transportation

Beam Truss (24)

Converting to the transport position (Fig. A1.02)

Mark out the adjustment profile (24.1) with pins and cotter pins in the lower mountings. (Fig. A1.01)
Secure connection strut (24.2) in the top chord with pins and cotter pins. (Fig. A1.02)

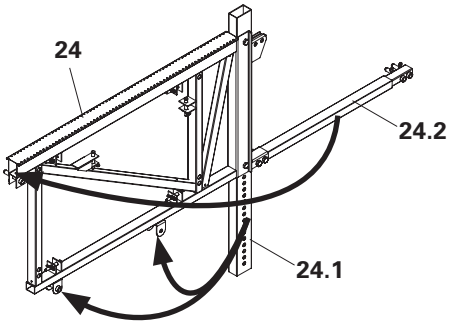

Fig. A1.01

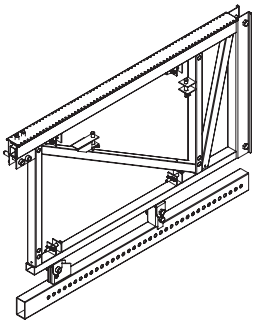

Fig. A1.02

Lifting Traverse STL 120 (6)

Converting to the transport position

1. Loosen vertically-positioned crank, M12, SW 19.
2. Fix crank in the raversing tube using hex. bolts and nuts M12, SW 19. (Fig. A1.03)

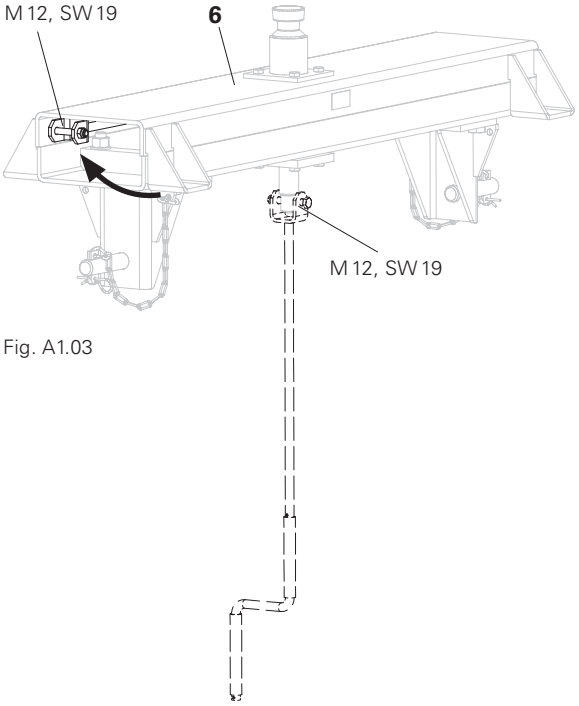

Fig. A1.03

Lifting Mechanism STM (13)

Store Lifting Head (11), Chains (13.2, 13.3) and Lifting Mechanism (13) in the chain casing. (Fig. A1.04)

The remote control and aerial are kept in the STM box.

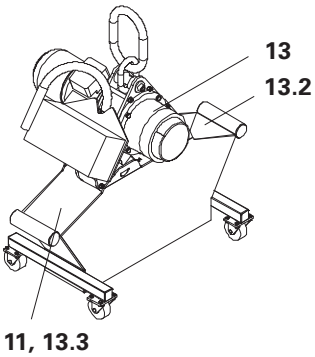

Fig. A1.04

A2 Assembly

Table combinations with 2 truss sections

Table length [m]	Truss Girder STT 168*	Truss Girder STT 592	Truss Girder STT 888	Truss Connector STC
6,00		2		
7,60	2	2		
9,00			2	
10,60	2		2	
12,00		4		2
13,50	2	4		2

* always at the table end

Required components.
With position for the Lifting Traverse STL, Lowering Device STN and rollers (Single Roller STE, Rear Carriage STR, Triple Roller ST).
Permissible table width 6.00 m
Permissible weight 6.0 t

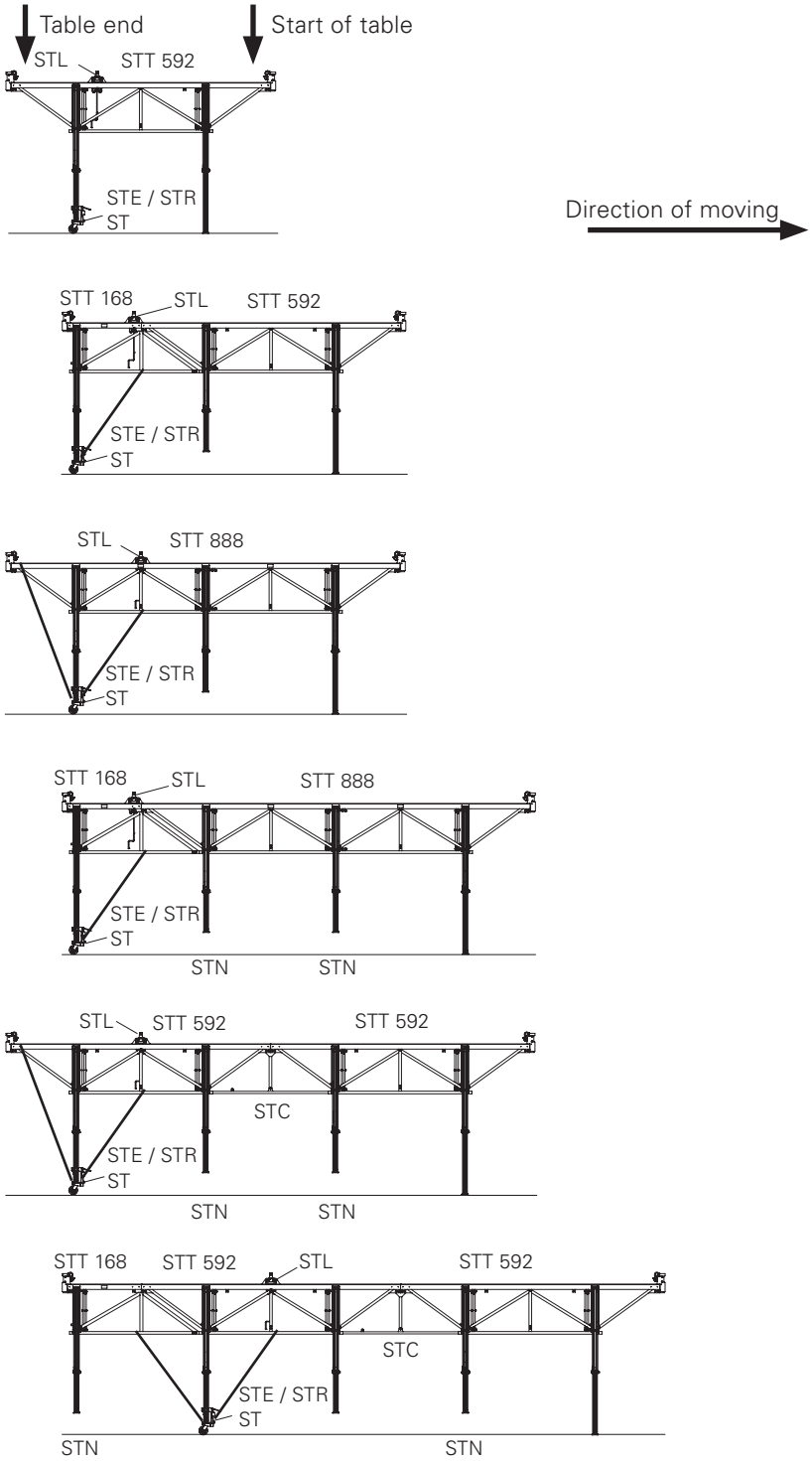

A2 Assembly

Table length [m]	Truss Girder STT 168*	Truss Girder STT 592	Truss Girder STT 888	Truss Connector STC
15,00		2	2	2
16,50	2	2	2	2
18,00			4	2
19,50	2		4	2
21,00		4	2	4
22,50	2	4	2	4
24,00		2	4	4

* always at the table end

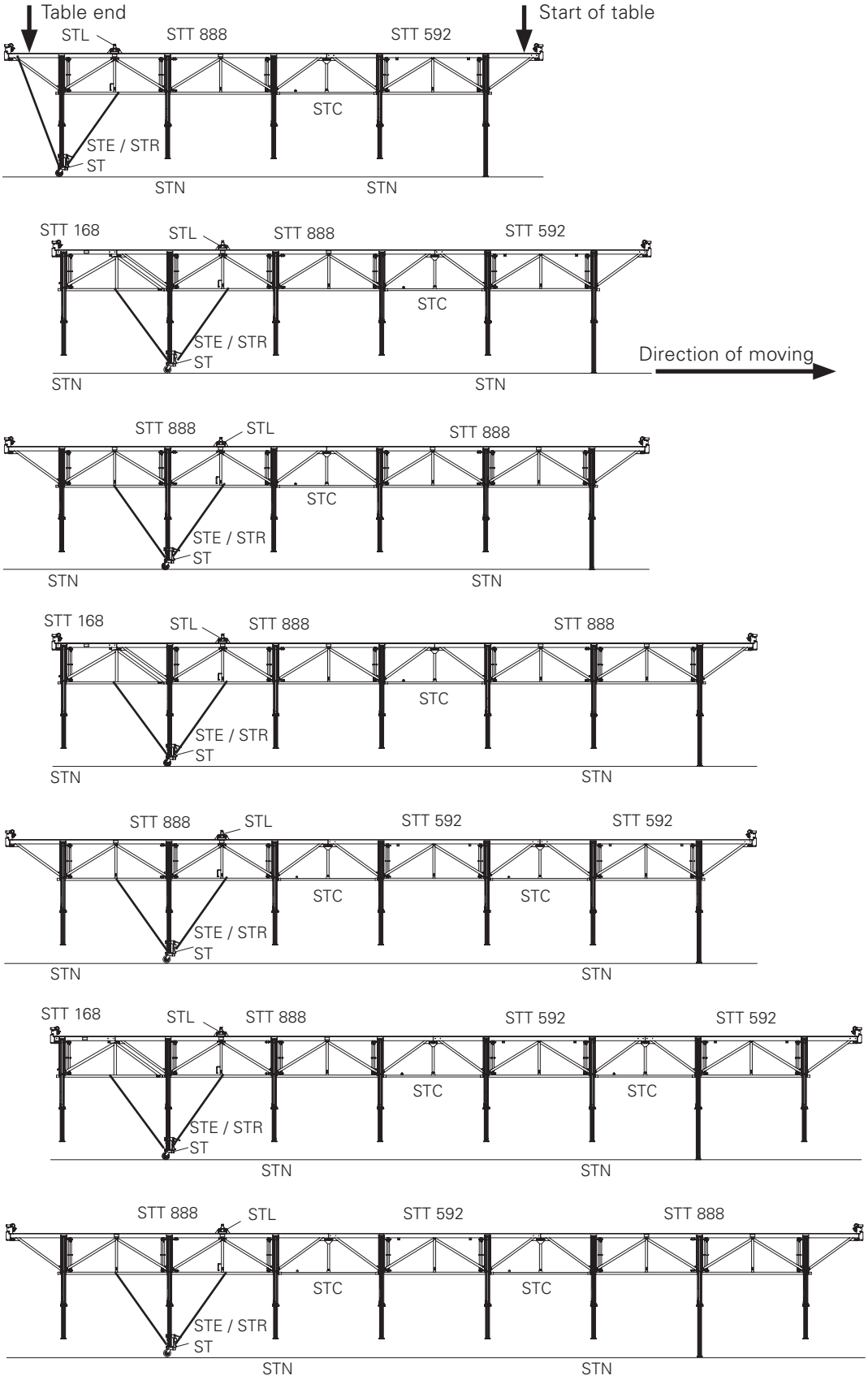

A2 Assembly

Truss girder STT

Truss Girder STT is symmetrical in the cross-section and can be used on the left or right. This symmetry allows easy and simple assembly of the SKYTABLE slab table.

Assembly

1. Align and secure the first Truss Girder STT (1). Depending on length, secure with crane and textile band. (Fig. A2.01)
2. Fasten diagonal braces (3) in the sequence 1 to 3 to the bottom and top chords with pins and cotter pins. (Fig. A2.02)

Required number of diagonal braces:

STT 888	3 pieces
STT 592	2 pieces
STT 168	1 piece

3. Erect second truss girder and fasten diagonal braces. (Fig. A2.03)

Always install the Truss Girder STT 168 at the end of the table.
An increased area of influence develops on the next to last prop.

4. Using pins and cotter pins, fix spreader tube (4) to the top chord in the same holder as the diagonal bracing. (Fig. A2.04)
The required number of spreader tubes (4) corresponds to the number of diagonal braces (3).

5. Diagonally align the truss girder unit in the ground plan. (Fig. A2.05)

The unit is securely connected to prevent it tipping over.

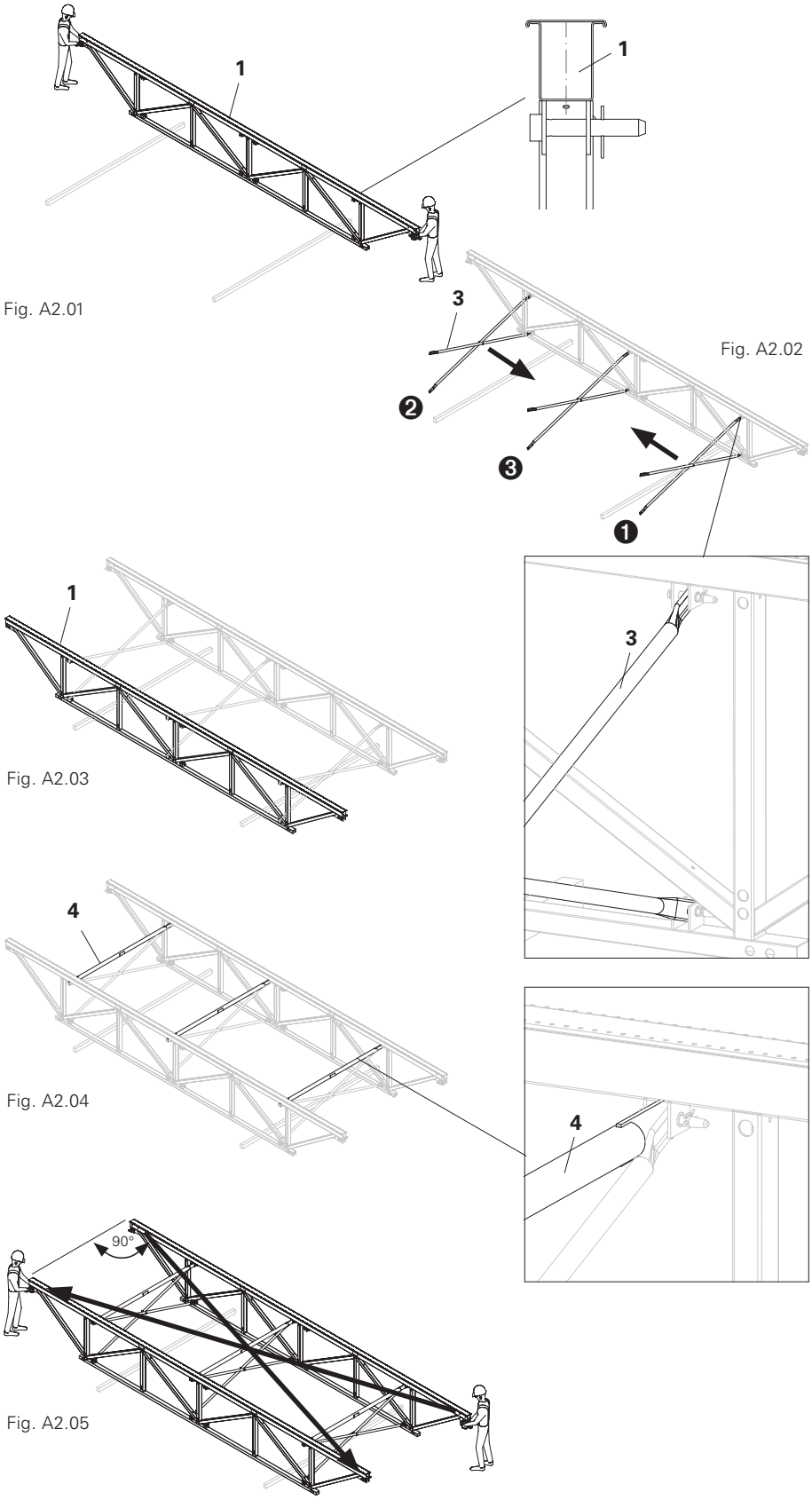

Fig. A2.01

Fig. A2.02

Fig. A2.03

Fig. A2.04

Fig. A2.05

A2 Assembly

Quick Lowering Device STQ

For releasing loads by 20 mm.
Connection between Truss Girder and MULTIPROP.

The Quick Lowering Device STQ is mounted to the outside of the Truss Girder STT on the node point of the bottom chord. (Fig. A2.06)
The longitudinal and lateral spacings are matched to the MRK frame sizes of the MULTIPROP system.

Preparation
1. Remove the red lever (5.1).
2. Remove wedges in the bottom and top bolts.

Assembly
1. Push Quick Lowering Device with the bolts into the drilled holes of the truss girder.
2. Top:
Secure bolts from the inside with a wedge and cotter pin.
Bottom:
Secure bolts from the inside with a wedge and cotter pin.
(Fig. A2.06.1)
3. Attach red lever (5.1) and secure with cotter pin.
(Fig. A2.06.2)

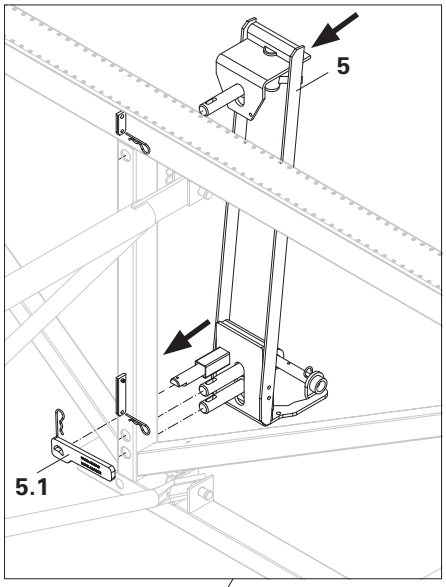

Fig. A2.06.1

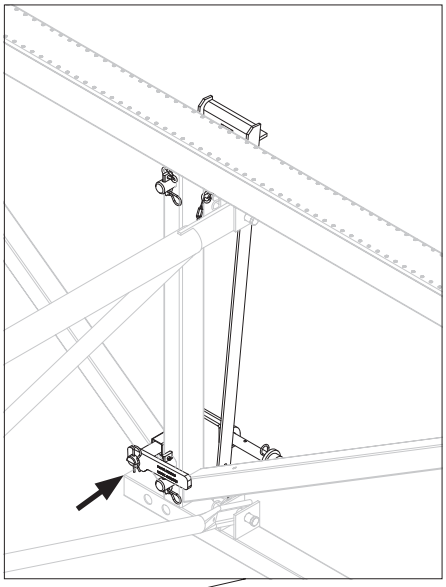

Fig. A2.06.2

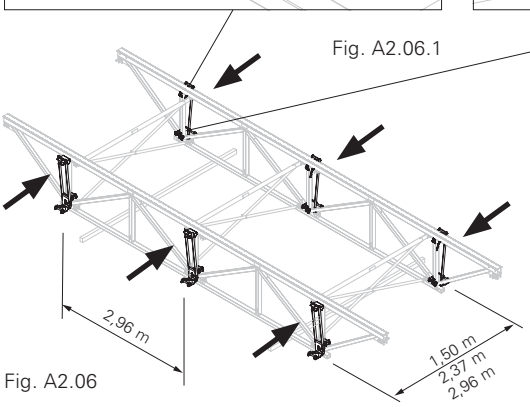

Fig. A2.06

For concreting, the red lever must be in a horizontal position!
(Fig. A2.07)

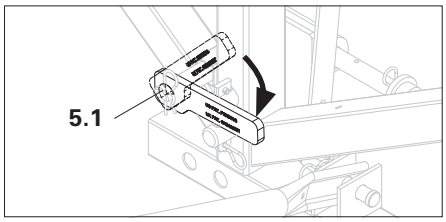

Fig. A2.07

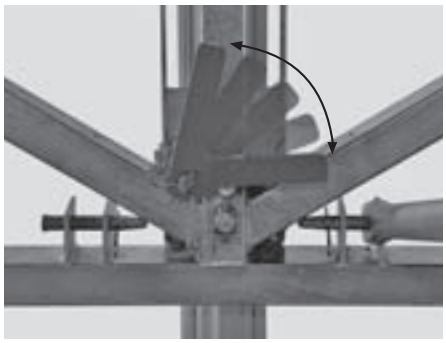

A2 Assembly

Truss Connector STC

For connecting 2 Truss Girders STT.

Assembly

1. Position first pre-assembled truss girder unit.
2. Raise truss connector (2) and fix to top and bottom chords using two pins and cotter pins respectively. (Fig. A2.08)

The pins must be inserted from the outside to the inside so that the cotter pins (2.1) are on the inside. (Fig. A2.08.1)

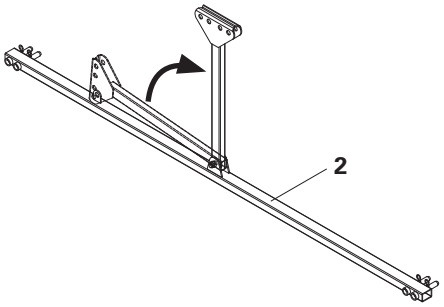

Fig. A2.08.1

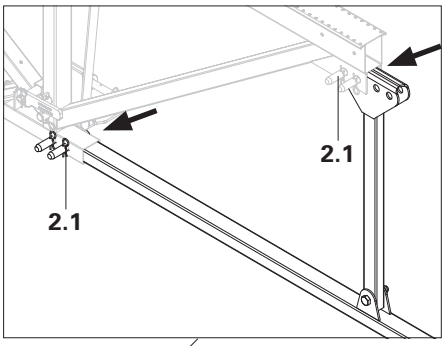

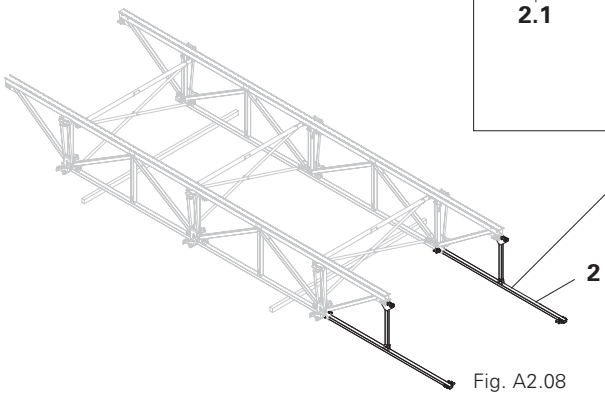

Fig. A2.08

3. Bring other Truss Girder STT into position and fix to the top and bottom chords using two pins and cotter pins respectively. (Fig. A2.09)

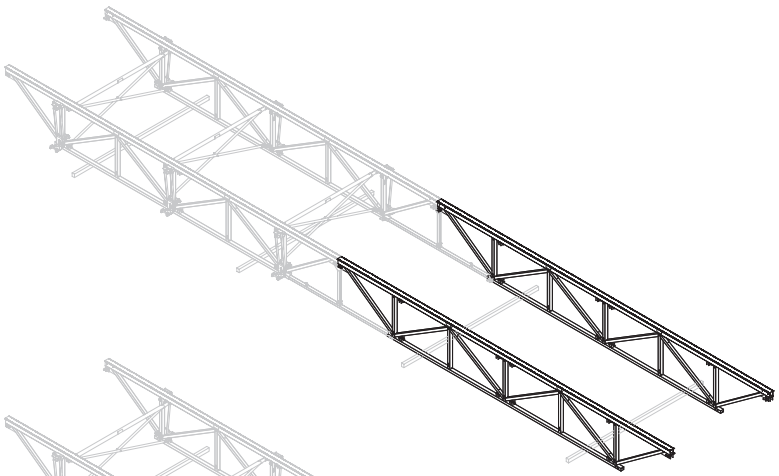

Fig. A2.09

Diagonal Brace STD and Spreader Tube STST

Install Diagonal Brace (3) and Spreader Tube (4) corresponding to sequence 1 to 3. (Fig. A2.10)

Repeat the assembly sequence until the required length of the table has been recahed.

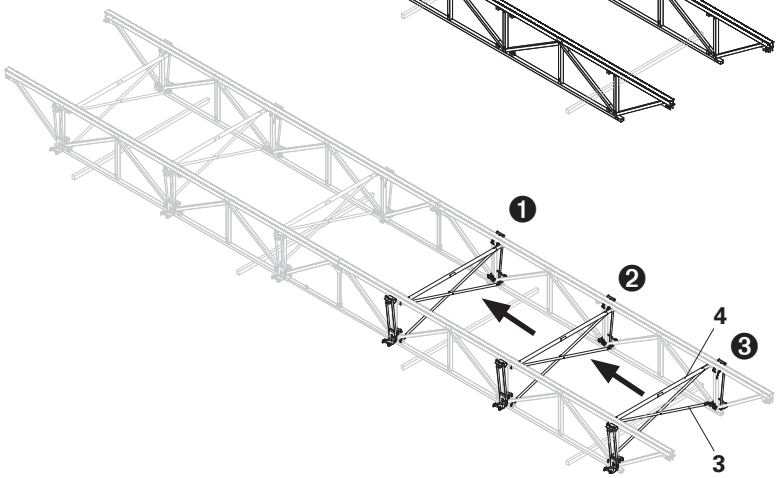

Fig. A2.10

A2 Assembly

Lifting Traverse STL 266 / 207-2

For moving PERI SKYTABLE tables with 2 truss girder units.
The Lifting Traverse STL is to be used with Diagonal Brace STD 266 or 207 for unit spacings of 2.66 m and 2.07 m. (Fig. A2.11)
See Table Combinations for position.

MP prop spacings 2.96 m or 2.37 m (MRK Frames 296, 237).

Assembly

1. Remove both supports (6.1) from the Lifting Traverse. Hex. bolt and nut M20, SW 30 (Fig. A2.11).
2. Position the second support (6.1) on the top chord and secure using bolts and wedge. (Fig. A2.12)
3. Place Lifting Traverse (6) on the support (6.1) and top chords. Fix in position using two hex. bolts and nuts M20 (SW 30) each side. (Fig. A2.13)
4. Put crank in a vertical position and fasten with hex. bolt M12 (SW 19).

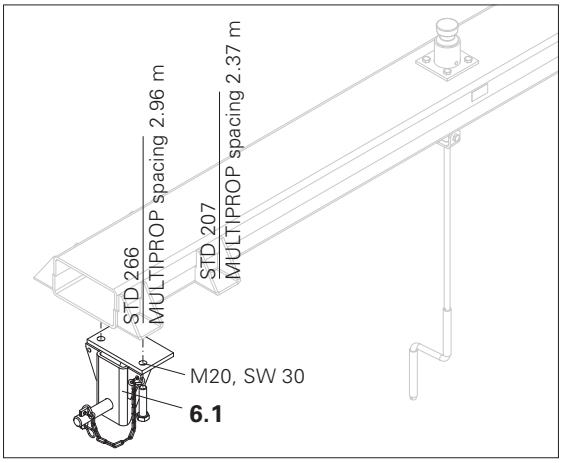

Fig. A2.11

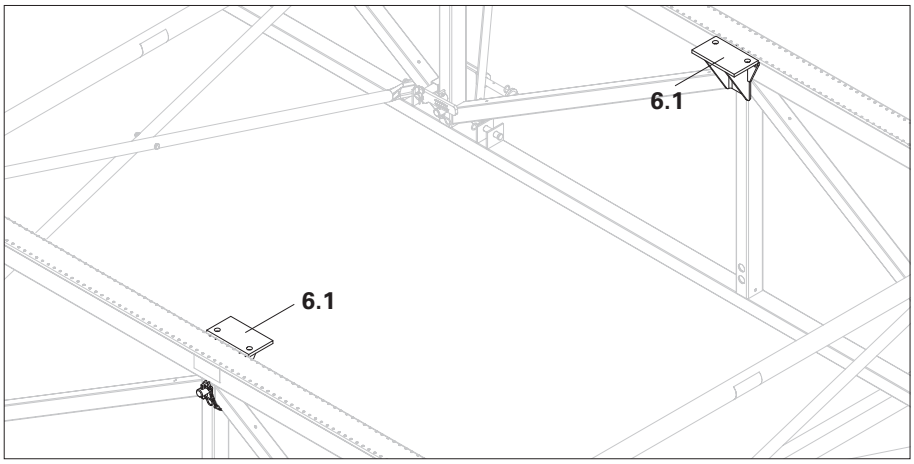

Fig. A2.12

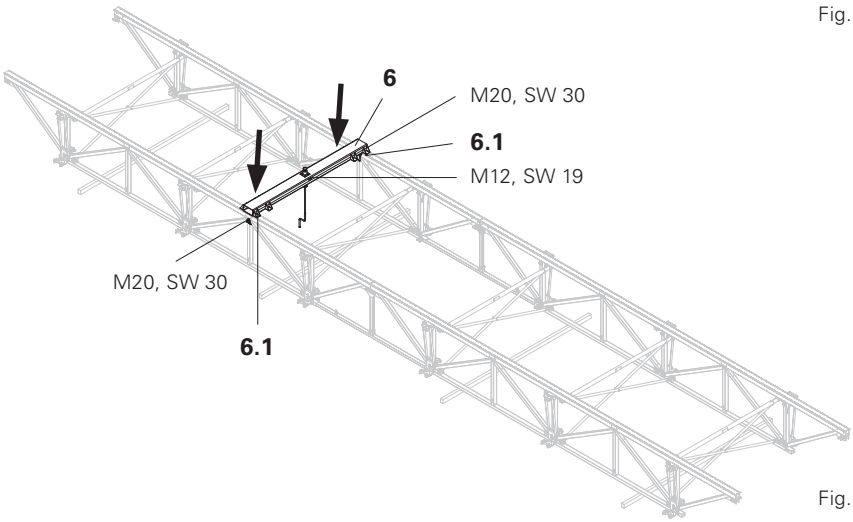

Fig. A2.13

Lifting Traverse STL 120-2

For moving PERI SKYTABLE tables with 2 truss girder units.
The Lifting Traverse STL 120-2 is to be used with Diagonal Braces STD 120 with a unit spacing of 1.20 m.
See Table Combinations for position.

MP prop spacing 1.50 m (MRK 150 Frame)

A2 Assembly

Crane Eye Adaptor STA

For connecting Guardrail Post STP to the Truss Girder STT. As attachment point for moving.

Assembly

1. Remove bolts (1.1) on the Truss Girder.
2. Insert Crane Eye Adapter into the Truss Girder (1) and secure with the pin and cotter pin (1.1).
(Fig. A2.14)

If required, the Crane Eye Adaptor STA can be mounted on both ends of the table.

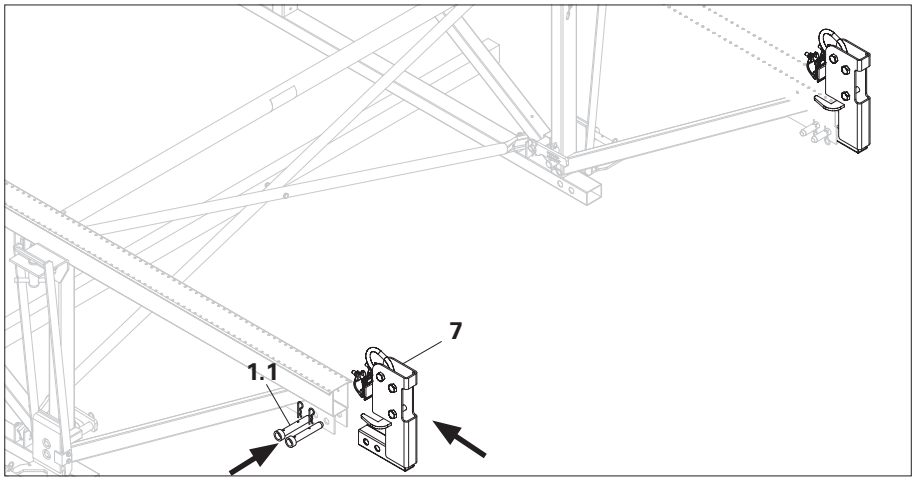

Fig. A2.14

GT 24 Girder

Assembly

1. Position girder (15) according to the plan and align. (Fig. A2.15)
2. Fix GT 24 Girder from below to the Truss Girder using two TSS Torx 6 x 60 (15.1).

Place GT 24 Girder on the girder node. Mount table symmetrically to the longitudinal axis.

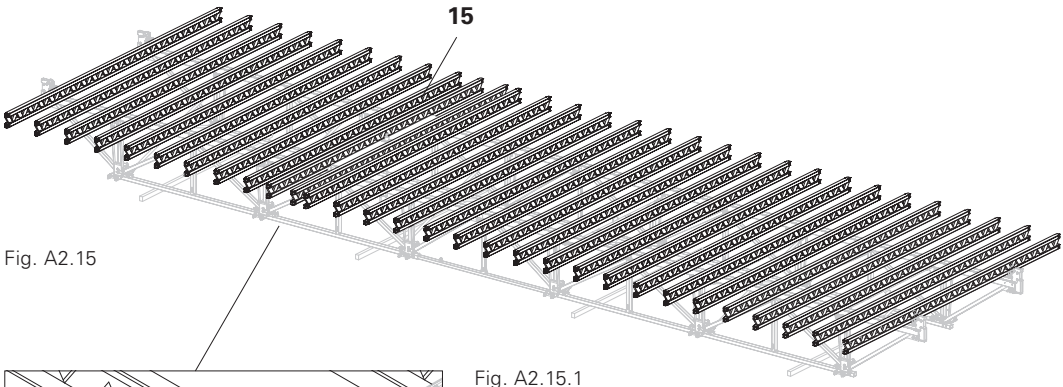

Fig. A2.15

Fig. A2.15.1

Mounting STG 24

For connecting the GT 24 Girder to the Truss Girder STT. Installation takes place diagonally on the outside and inside of the GT 24 Girder and only on the girder which is nearest to the MP prop. (Fig. A2.16)

Assembly

1. Slide on Mounting STG 24 on the bottom chord of the GT 24 Girder and the top chord of the Truss Girder.
2. Secure with two nails, e.g. double-headed nail 3.1 x 65. (Fig. A2.17)
3. Depending on the static requirements, mount bracing against tilting.

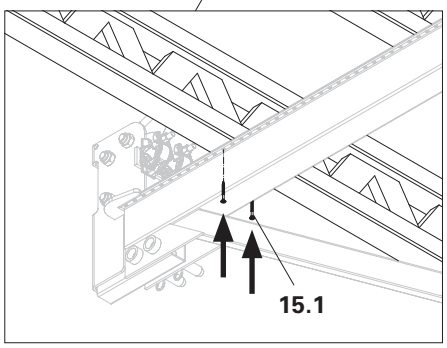

Fig. A2.16

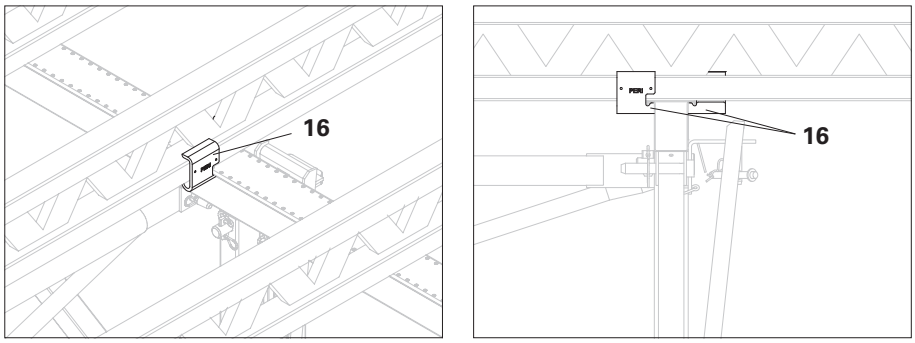

Fig. A2.17

A2 Assembly

Formlining

Planning information:

- Permissble spans for formlining (see tables)
- Lay formlining sheets (14) so that the formlining joints are positioned on one girder. (Fig. A2.19)
- Allow for filler areas at the start of the table.
- Take into consideration loading dimensions for means of transport.

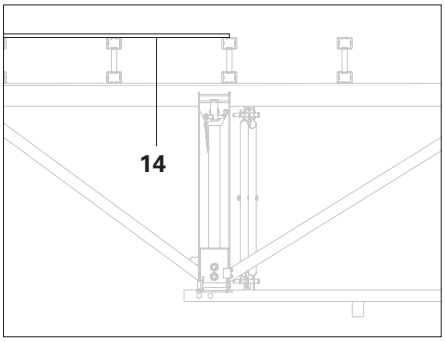

Fig. A2.18

Assembly

1. Position formlining according to the plans and align.
2. Screw formwork panel on to GT 24 Girder, Torx 6 x 60.

Take into consideration on the construction site:

For the moving spigot (Fig. A2.19.1) in the Lifting Traverse and the Crane Eyes (Fig. A2.19.2) on the Crane Eye Adapters, openings in the formlining sheets are to be made.
Furthermore, an opening for guiding and suspending the Lifting Head STH is required. (Fig. A2.19.1)
This opening must be reclosable.

Detail A
For Lifting Head and moving spigot.

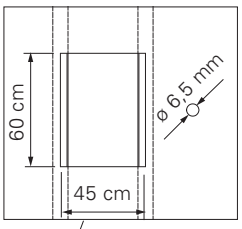

Fig. A2.19.1

The moving pin (6.2) must be flush with the formlining sheet when concreting.

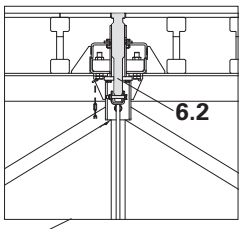

Detail B
For crane eyes.

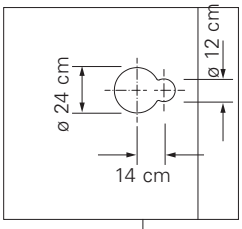

Fig. A2.19.2

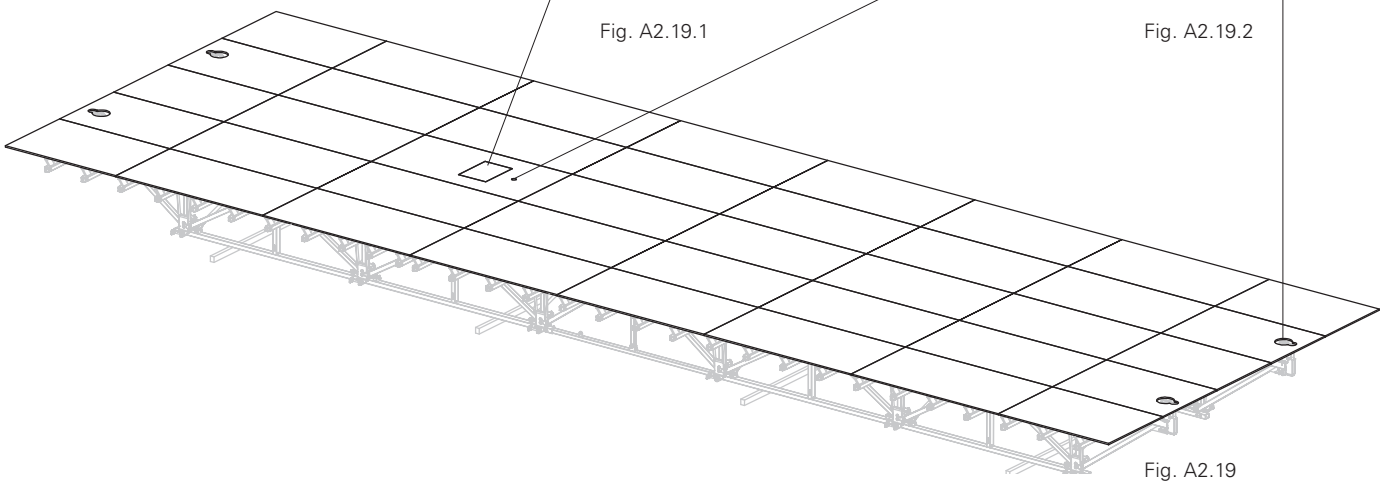

Fig. A2.19

A2 Assembly

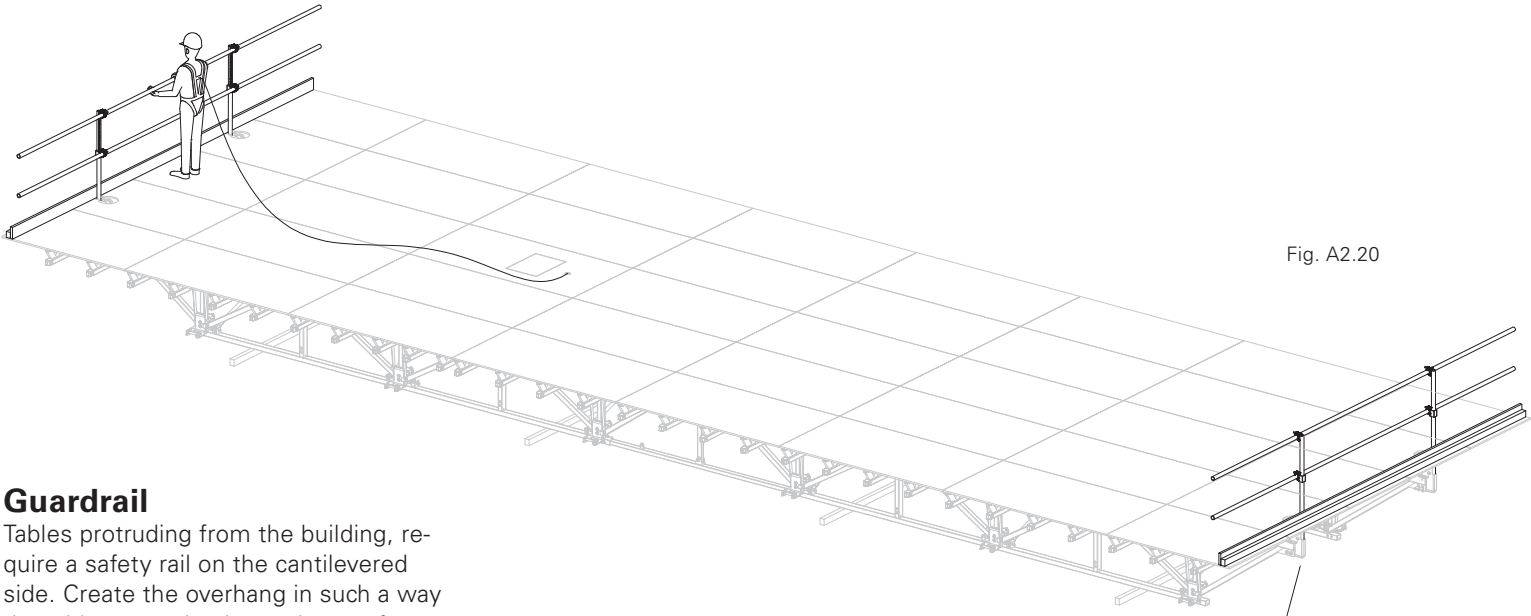

Fig. A2.20

Guardrail

Tables protruding from the building, require a safety rail on the cantilevered side. Create the overhang in such a way that side protection is continuous from table to table. (Fig. A2.20)

Guardrail consists of:
2 x Crane Eye Adaptor STA
2 x Guardrail Post STP
Safety rails provided by the contractor (3 x scaffold tubes Ø 48,3, 1 x toe board, toe board mountings)

Assembly
1. Insert Guardrail Post STP (8) into the Crane Eye Adaptor STA (7).
2. Place scaffold tube (8.1) in the standard coupling and clamp:
2 x as guardrails
1 x as bracing under the formlining sheet
3. Fix toe board.
(Fig. A2.20.1)

When moving out the SKYTABLE table, the rear guardrail is lowered.

Modifying
From a safe position, lift Guardrail Post STP (8) and lower at an angle through the openings in the Crane Eye Adapters. (Fig. A2.20.2)

The SKYTABLE table is now ready to be moved out.

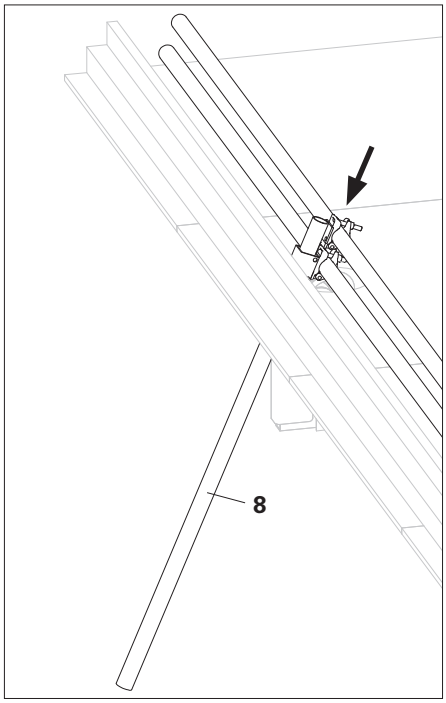

Fig. A2.20.2

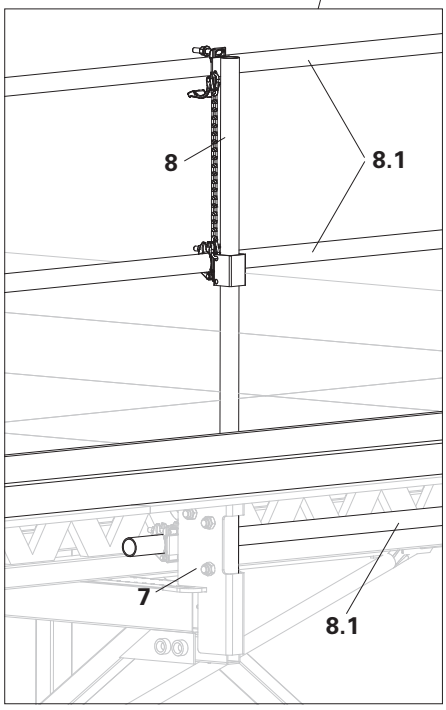

Fig. A2.20.1

A2 Assembly

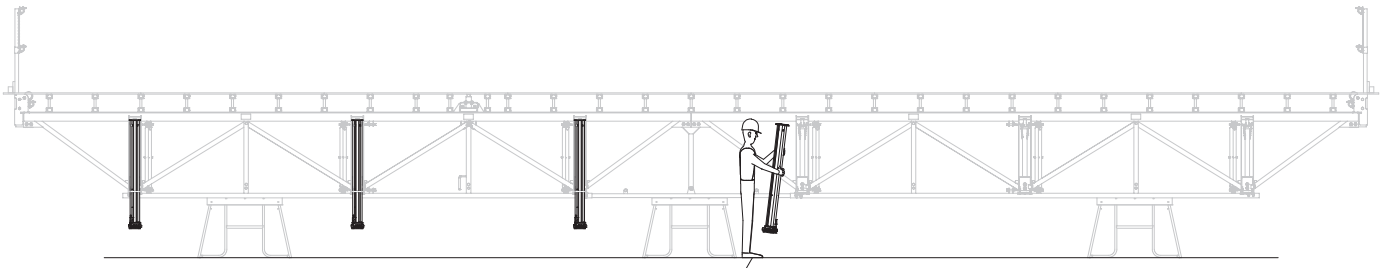

Fig. A2.21

MULTIPROP Slab Props

- **Check existing loads and transfer them using props with sufficient load-bearing capacity!**
- **Always take into account the PERI MULTIPROP type test and assembly instructions!**
- **The MULTIPROP 625 must not be used!**

Assembly

1. Position SKYTABLE table on an assembly aid, e.g. MULTIPROP towers or assembly support. (Fig. A2.21)
2. Retract MULTIPROP slab prop (17) into the spigot (5.2) of the Quick Lowering Device (5).
3. Secure at top and bottom by means of pins and cotter pins. (Fig. A2.21.1)

- Mount MP slab props with the outer tube towards the top.
- Use extended MP Slab Props as braced towers.

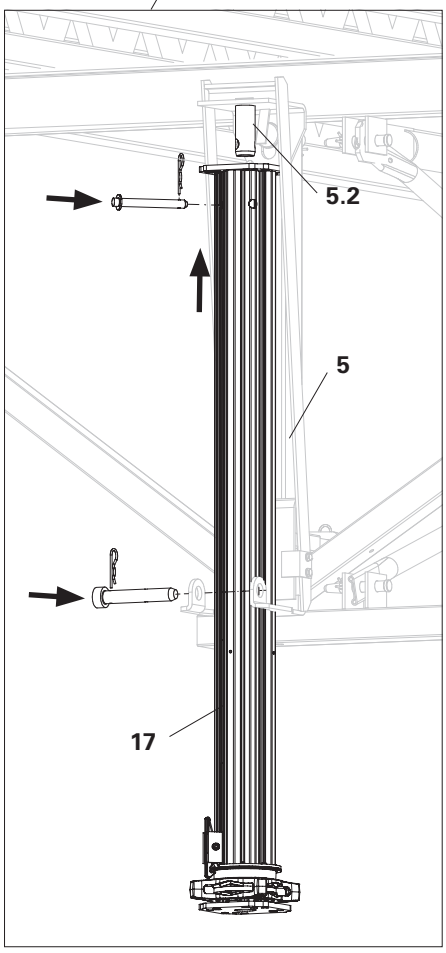

Fig. A2.21.1

A2 Assembly

Element for width compensation

For larger width compensations, units are pre-assembled and mounted on site to the table.

As installing the compensation element usually takes place by hand, attention must be paid to the weight. Therefore only pre-assemble small units!

Assembly

1. Shorten GT 24 Cross Beam on top chord according to Fig. A2.22.
2. Position and align required GT 24 main beams for accommodating MP props and cross beams according to the plans. (Fig. A2.23)
3. Connecting the main and cross beams is carried out using 2 x Spax bolts 6 x 100 and washers Ø 6.4 per cross beam. (Fig. A2.24)
4. Cut plywood formlining according to plan requirements and fix with TSS Torx 6 x 60 to the girders.
5. Install girders for accommodating the MP prop.

In order to be able to fold the compensation element when it is fitted, the top chord of the GT 24 Cross Beam must be shortened.
(Fig. A2.22)

Do not use new GT 24 girders.
Use GT 24 Girders (20a) as assembly aids. (Fig. A2.23)

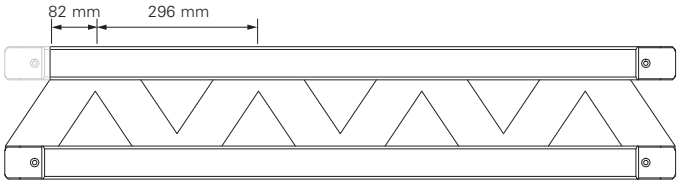

Fig. A2.22

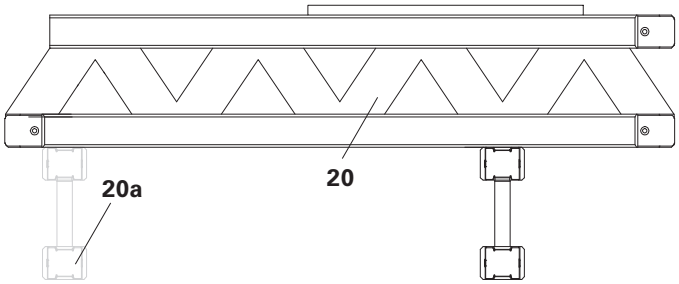

Fig. A2.23

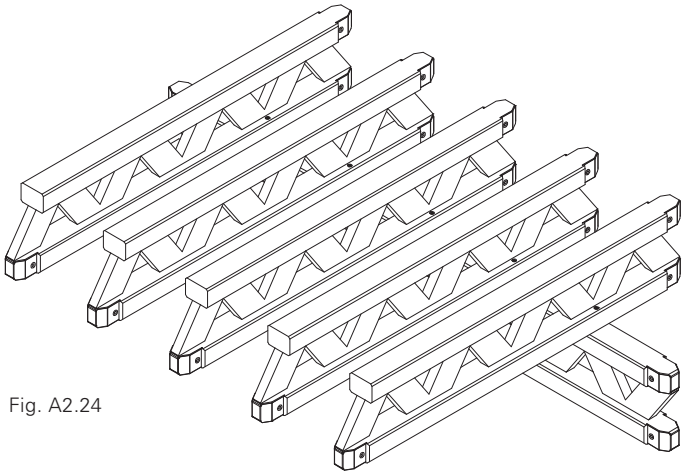

Fig. A2.24

A3 Shuttering

Placing the table

1. Position and level the table according to the plans.
2. Install horizontal anchoring according to the plans.
3. Install longitudinal and lateral compensations.

All horizontal forces must be safely transferred into the building!

Fig. A3.01

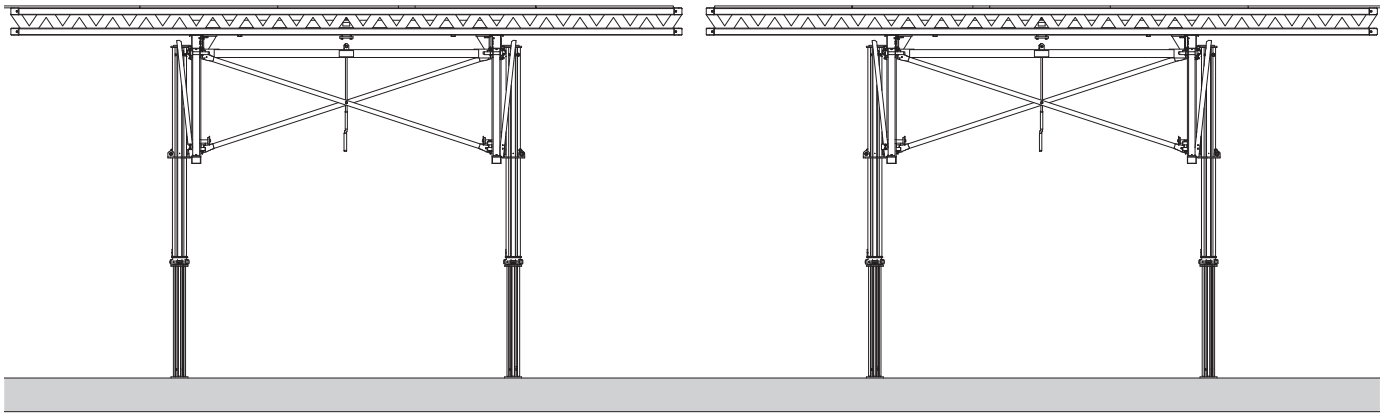

Concreting

Additional steps have to be taken to guarantee the stability against overturning e.g. concreting must be carried out in several pours or additional edge supports are to be provided.

When concreting, the moving pin (6.2) must be flush with the formlining sheet. (Fig. A3.03)

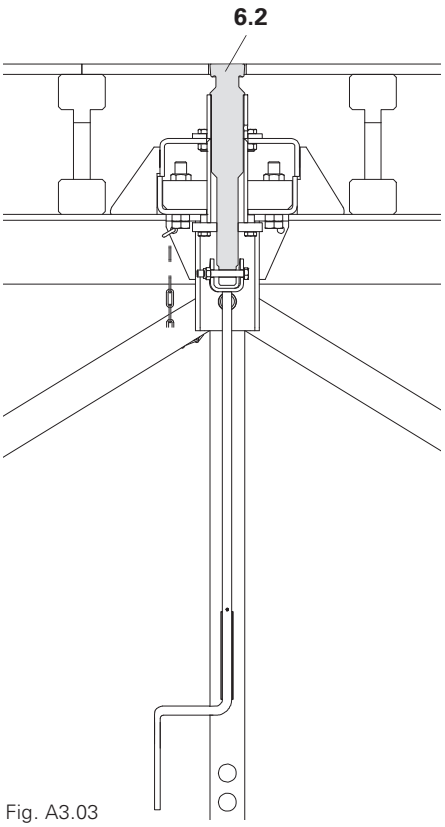

Fig. A3.03

Striking clearance

Wood strips, for example, are fixed to the wall as support for the formlining.

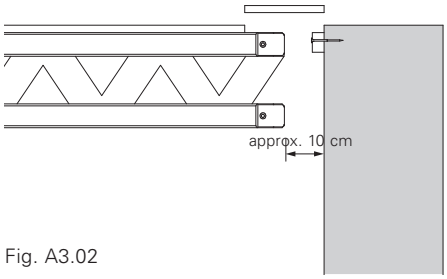

Fig. A3.02

A4 Compensations

Width compensation without support

For smaller compensations with plywood sheeting (14) which rests on both tables. (Fig. A4.01.1)

Width compensation with support in the centre

For larger compensations with plywood sheeting (14) which rests on both tables and is additionally supported by a GT 24 girder positioned in the centre. (Fig. A4.01.2)

For permissible spans L of the plywood sheets, see Tables.

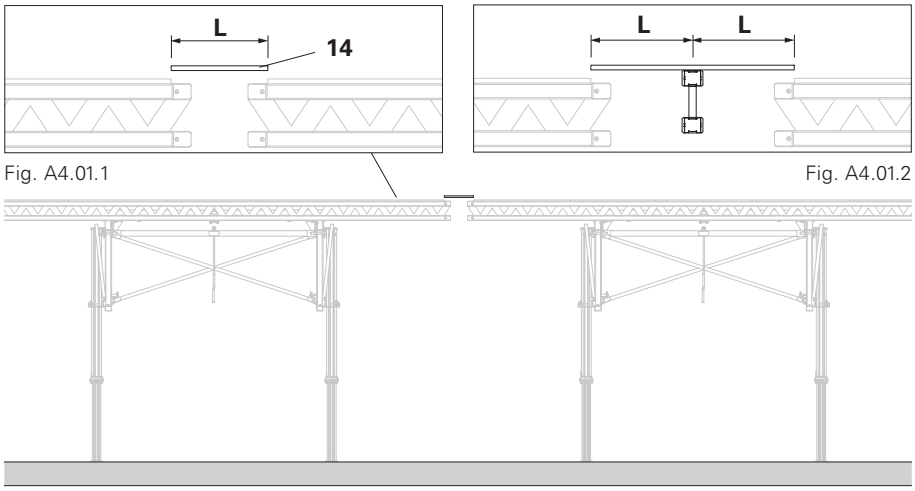

Fig. A4.01.1 Fig. A4.01.2

Fig. A4.01

Width compensation with pre-assembled element

The pre-assembled width compensation elements must always be mounted on both sides of the table due to reasons of symmetry (moving procedure)!

When using SKYTABLE tables with width compensation elements, the area of influence is increased!

The increased prop loads must be taken into consideration!

Installation

1. Position pre-assembled element (20) on the SKYTABLE table and, with the scaffold tube Ø 48 mm (20.1), install through the GT 24 spacings.
2. Secure the scaffold tube against slipping by means of a scaffold coupling. (Fig. A4.02.1)
3. Bolt on Crosshead (20.2) for securing the MP prop with the GT 24 main beam. (Fig. A4.02.2)
4. Swivel up the pre-assembled element, position the MP prop (17) and spindle out until required height is reached. (Fig. A4.03)

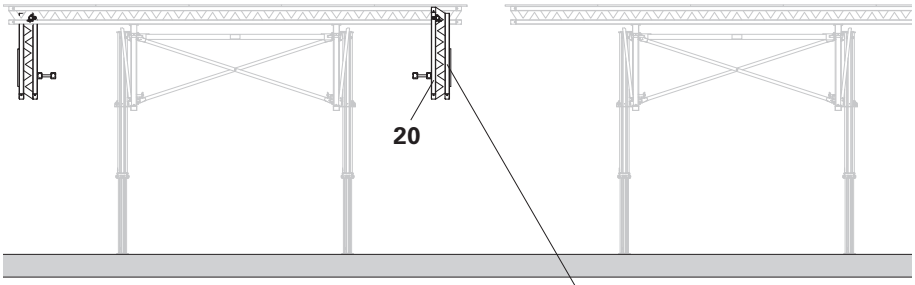

Fig. A4.02

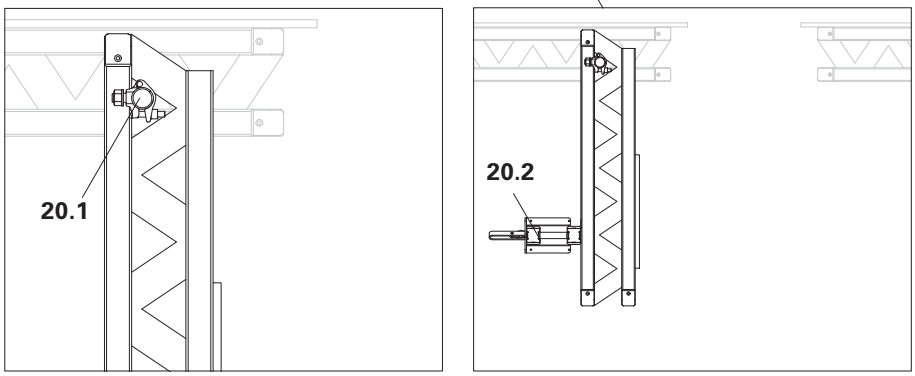

Fig. A4.02.1 Fig. A3.02.2

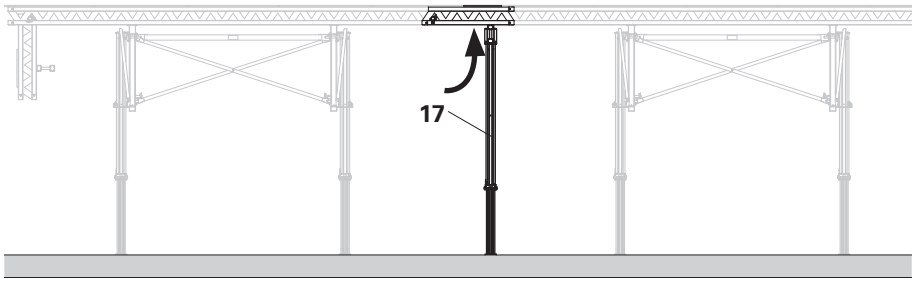

Fig. A3.03

A4 Compensations

Length compensation without support

For smaller compensations with plywood sheeting (14) which rests on both tables. (Fig. A4.04.1)

Length compensation with support in the centre

For larger compensations with plywood sheeting (14) which rests on both tables and is additionally supported by a GT 24 girder positioned in the centre. (Fig. A4.04.2)

For permissible spans L of the plywood sheets, see Tables.

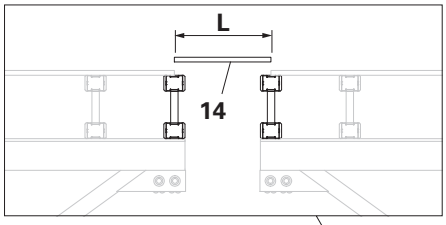

Fig. A4.04.1

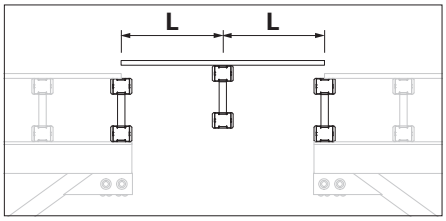

Fig. A4.04.2

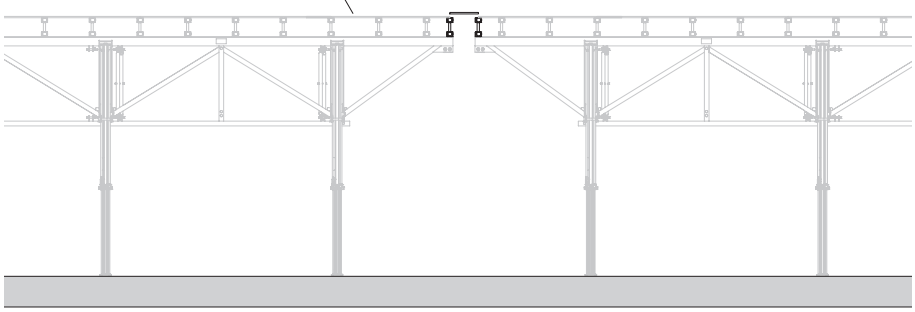

Fig. A4.04

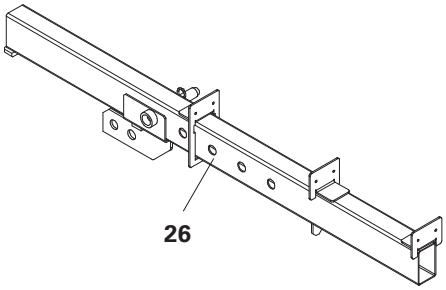

Table extension 50 - 90 cm

With the Telescopic Extension ST, the SKYTABLE tables are extended at the table ends by 50 to 90 cm in 10 cm increments.

Using SKYTABLE tables with Truss Girder STT 168 at the end of the table results in an increase in the area of influence on the last slab prop!

Assembly

1. Slide Telescopic Extension ST (26) onto the truss girder end and secure by means of two pins and cotter pins (26.1) respectively.
2. Set out cantilever (26.2).
3. Position the GT 24 girder and secure.
4. Position plywood formlining (14) and secure.
5. Support Telescopic Extension ST with an MP prop (17).

(Fig. A4.05)

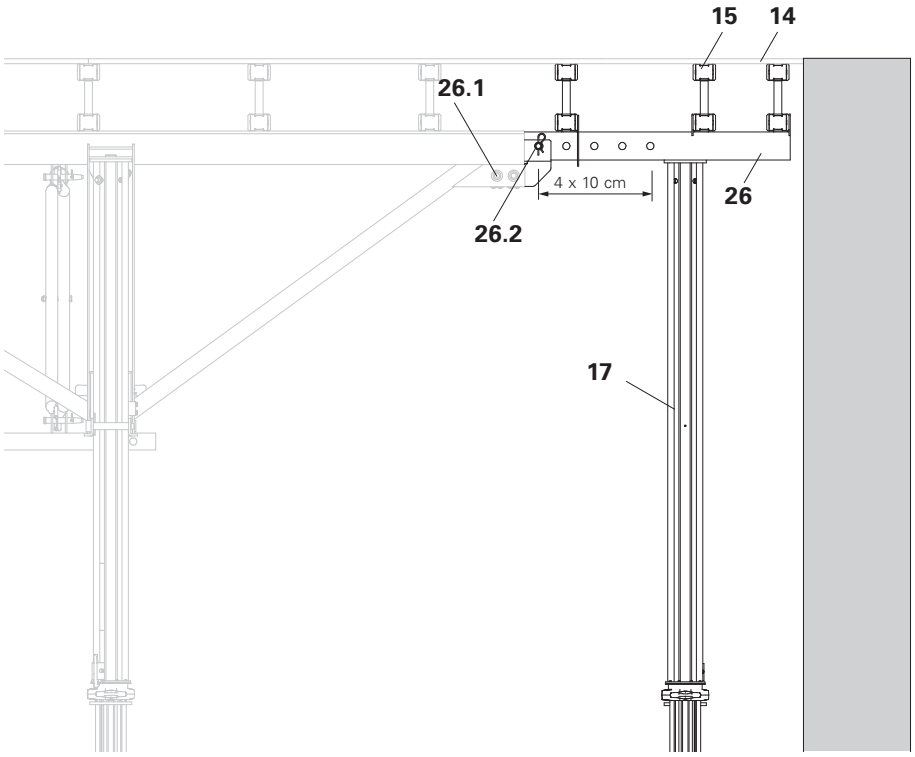

Fig. A4.05

A5 Striking

Preparation

- **Check the stability of the SKYTABLE table!**
- **Retract components only when the concrete has sufficiently hardened and the person in charge has given the go-ahead for striking to take place!**
- **Site personnel are not allowed to remain under the truss girders or cross bracing. Risk of injury!**

Assembly
1. Depending on the situation on site, remove stopend formwork from concrete.
2. Remove MP props from compensations (20).
3. Depending on the compensation, these are folded or removed.
(Fig. A5.01.1)

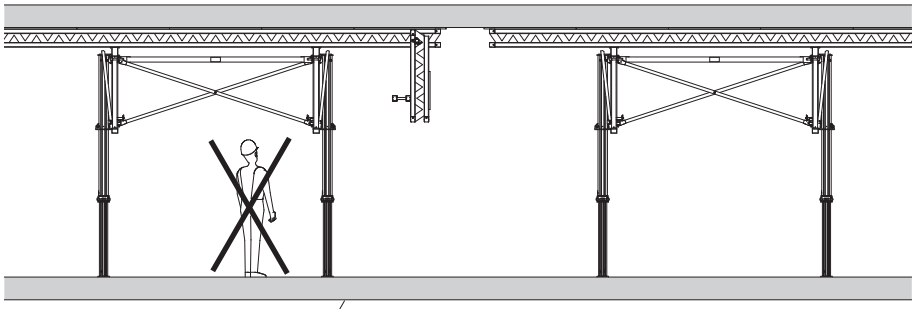

Fig. A5.01

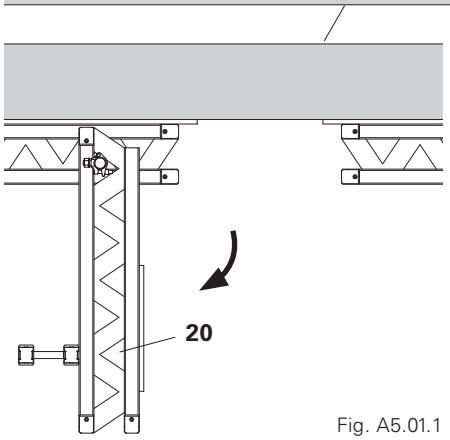

Fig. A5.01.1

Relieving prop loads

Avoid large transfer of load onto the MP props. Therefore, first lower the props next to the columns or walls!

Push the red lever (5.1) on the quick lowering device upwards. This results in the slab prop being lowered by 2 cm. (Fig. A5.02.1 and A5.02.2)

In case of high loads, the adjusting collar of the MP prop can be loosened with the HD wrench.

Fig. A5.02.1

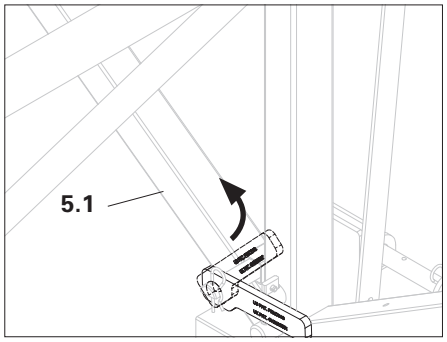

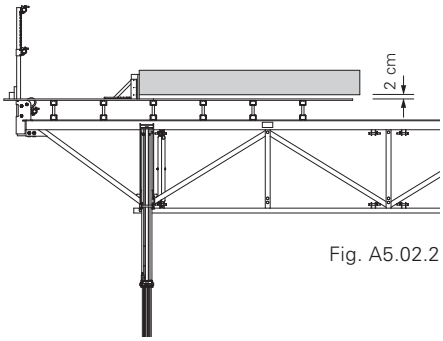

Fig. A5.02.2

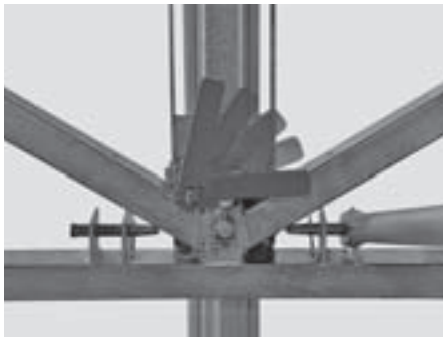

A5 Striking

Lowering Device STN

The position of the Lowering Device STN varies depending on the length of the table (see Table Combinations).

1. Spindle the second prop (17) from the front and the last prop approx. 50 cm. (Fig. A5.03.1)

2. Move four Lowering Devices STN (10) under the props which are then lifted (see next page). (Fig. A5.03.2)

3. The first prop is spindled by approx. 30 cm, the remaining props by approx. 50 cm. (Fig. A5.03.3)

4. Move rollers (9a, 9b, 9c, 9d) under the props (assembly: see next page). (Fig. A5.03.4)

5. Lower the SKYTABLE evenly and simultaneously with the lowering devices onto the rollers and first pair of props. (Fig. A5.03.5)

6. Remove Lowering Devices STN. Brace the props with the rollers by means of tension straps (9e) (see A6 Moving). (Fig. A5.03.6)

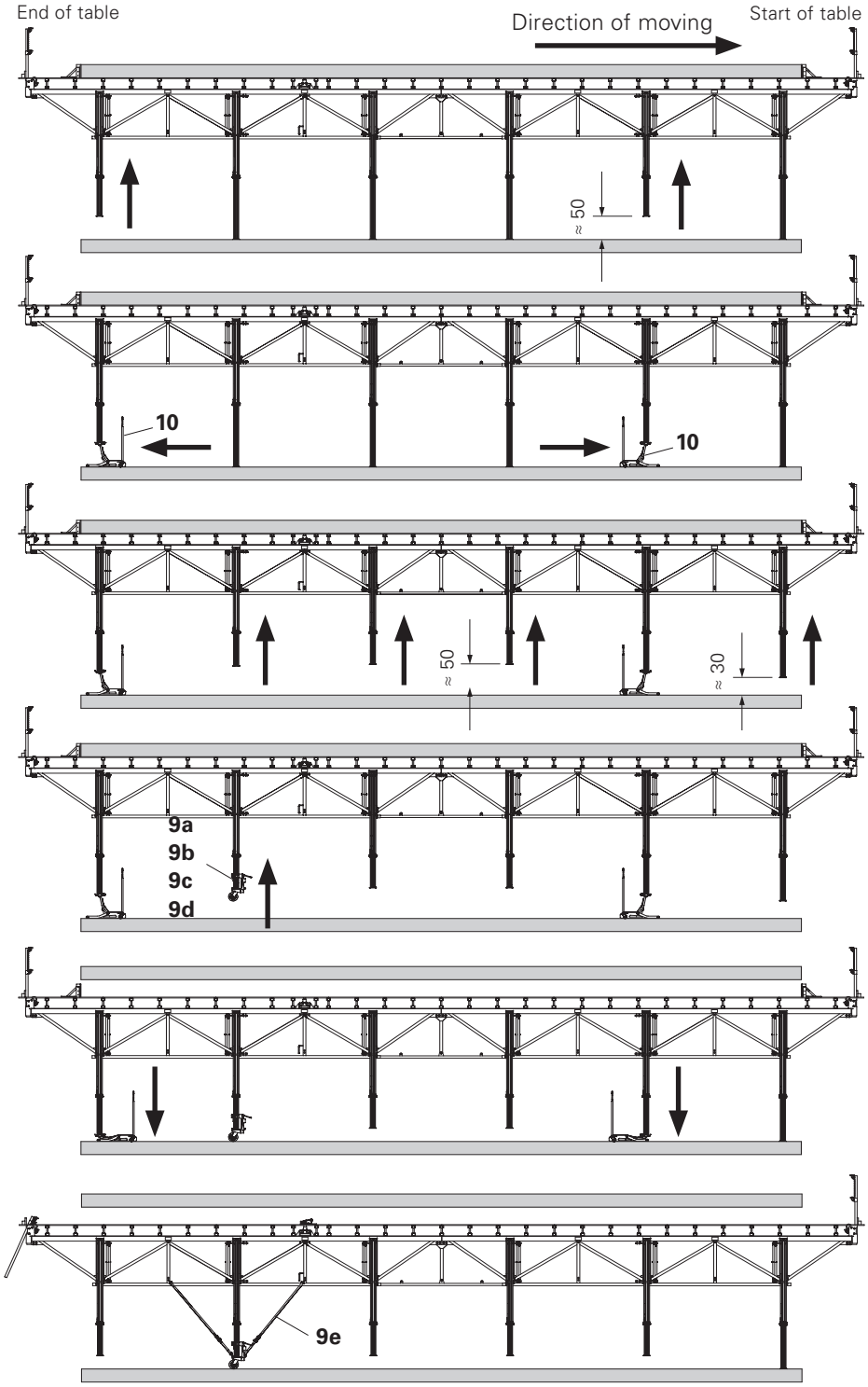

Fig. A5.03.1 - 6

A6 Moving

Hydraulic Lowering Device STN

For lowering the SKYTABLE tables.

Accommodate MP Prop (17) on the centering pivot (10.1) of the hydraulic lowering device (10). (Fig. A6.01)

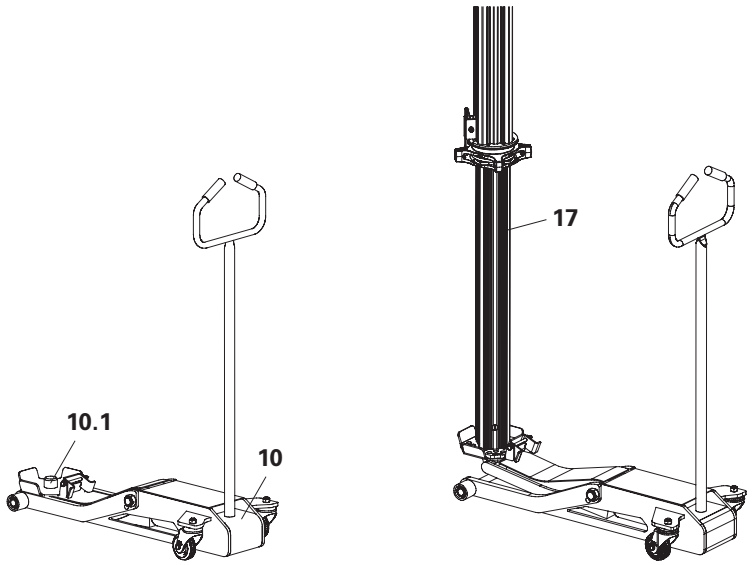

Fig. A6.01

Bracing

For securing the MP prop to prevent bending. (Fig. A6.02)

The bending stress of the MP props depends on the extension length of the props. Bracing is not required if the existing horizontal load H is smaller than the permissible horizontal load - permissible H in the table!

MULTIPROP 250		
Vertical Load ≤ 20 kN		
Extension length L [m]	perm. H [kN]	max. μ
1,50	8,0	0,40
1,80	5,2	0,26
1,95	3,7	0,18
2,10	2,7	0,14

MULTIPROP 350		
Vertical Load ≤ 20 kN		
Extension length L [m]	perm. H [kN]	max. μ
2,00	3,2	0,16
2,30	2,5	0,12
2,50	2,0	0,10
2,70	1,5	0,07
2,90	1,0	0,05

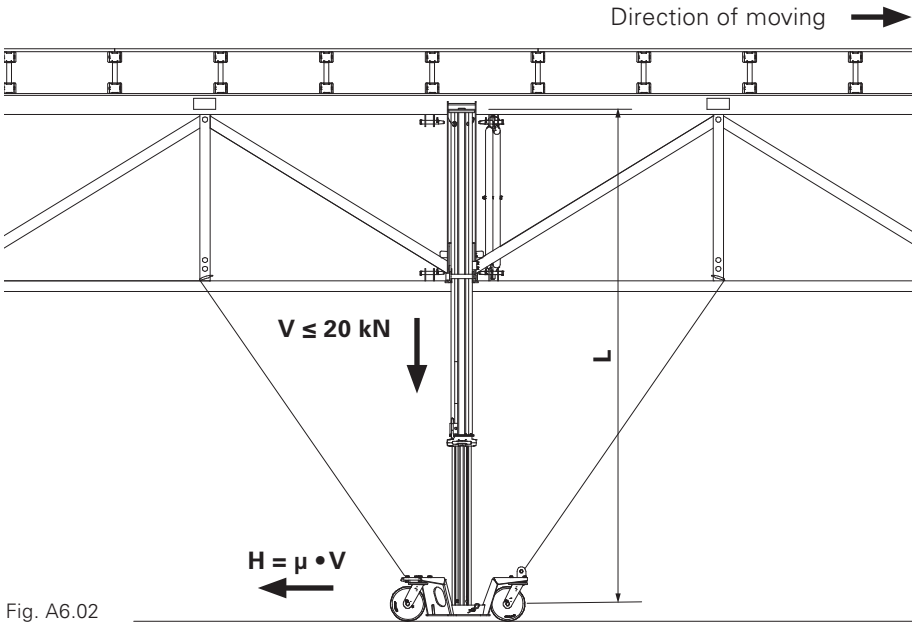

Fig. A6.02

A6 Moving

Rollers

For moving the SKYTABLE table out, the following components can be used:
– Rear Carriage STR 120 (9a)
– Rear Carriage STR 296/237 (9b)
– Single Roller STE (9c)
– Triple Roller ST (9d)

For roller positions, see Table Combinations.

Rear Carriage STR 150 (9a) Rear Carriage STR 296/237 (9b)

1. Fold the handle (9a1 or 9b1) downwards. The width of the rear carriage is then reduced by 300 mm.
2. Position the Rear Carriage STR (9a, 9b) between the MP props (17) and push one end under the first MULTIPROP prop.
3. Fold handle (9a1 or 9b1) upwards so that the other end of the rear carriage slides under the second MULTIPROP prop.
4. Lower the MULTIPROP props.
5. Brace Rear Carriage STR (9a, 9b) in both directions. (Fig. A6.03)

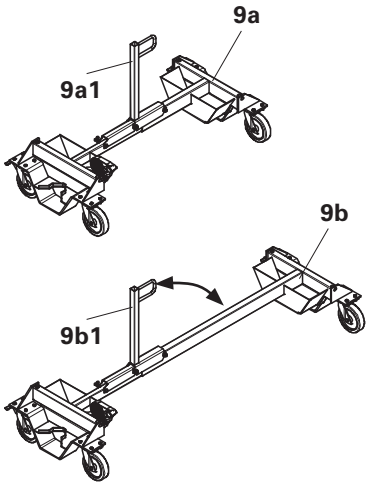

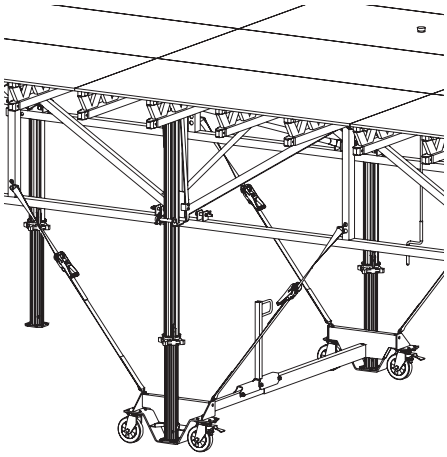

Fig. A6.03

Single Roller STE (9c)

1. Move Single Roller STE (9c) under the MULTIPROP prop (17), lock in place in the centering pivot and secure with bolts (9c2). The base plate must lie under the fail-safe device (9c3).
2. Lower the MULTIPROP props.
3. Brace Single Roller STE (9a) in both directions. (Fig. A6.04)
Support (9c1) is pivoted upwards during assembly on the inner tube.

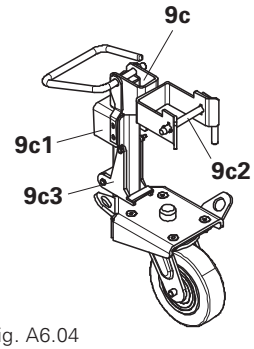

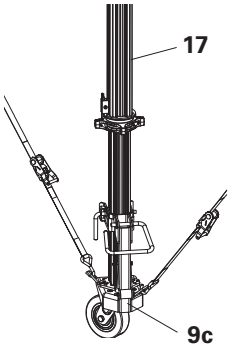

Fig. A6.04

Triple Roller ST (9d)

1. Move the Triple Roller ST (9d) under the MULTIPROP prop (17) and securely lock in the centering pivot.
2. Secure the base plate with pin and cotter pin.
3. Lower MULTIPROP props.
4. Brace Triple Roller ST in direction of moving. (Fig. A6.05)

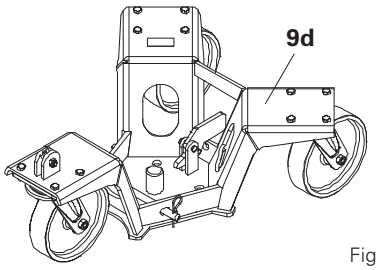

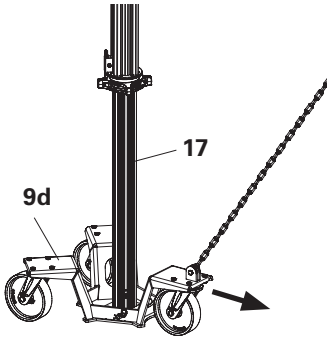

Fig. A6.05

A6 Moving

Lifting Mechanism STM

Follow Instructions for Use!
Important:
Check the polarity of the connecting cable for the lifting mechanism (see Instructions for Use) -> malfunction!
The chain links must be free of dirt and concrete residue.
Ensure that the chains are neither twisted nor knotted!

Preparation

1. Clamp Chain Guidance Shoe STMS (12) in the table axis (moving spigot of the lifting traverse) on the slab, SW 19. (Fig. A6.07)

2. Position Lifting Mechanism (13) on the slab at the side where the table is moved out.
(Fig. A6.07)

3. Lift the lifting mechanism with the crane until the chains hang freely.

4. Lower Lifting Mechanism (13) and lay 1-sling chain (13.3) with Lifting Head over the Chain Guidance Shoe on the formlining sheet. (Fig. A6.07)

5. Suspend the 2-sling lifting gear (13.2) in the crane eye of the Crane Eye Adapter STA. (Fig. A6.08)

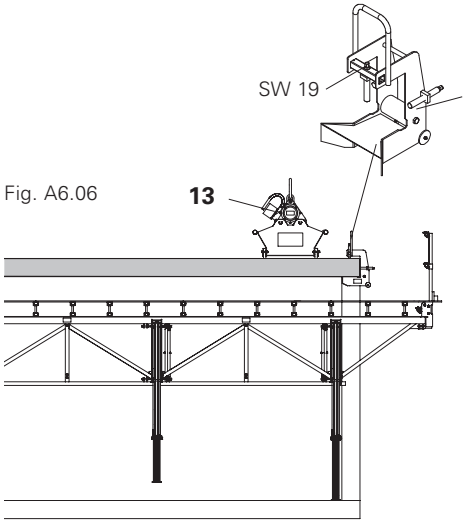

Fig. A6.06

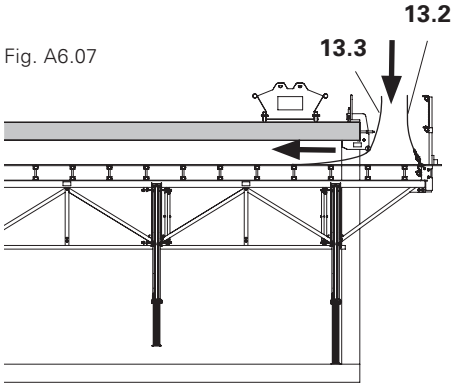

Fig. A6.07

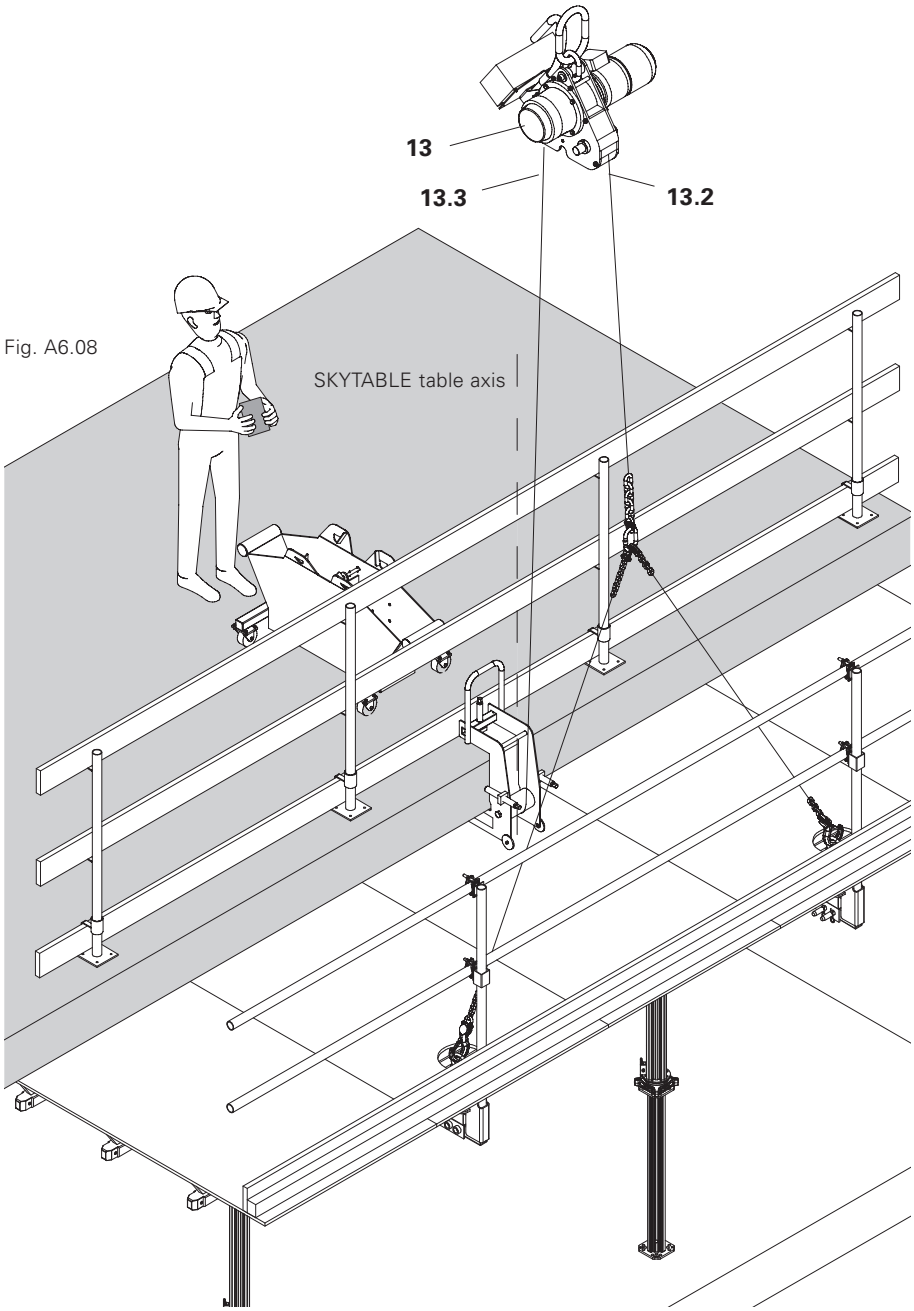

Fig. A6.08

A6 Moving

Lifting Head STH

The Lifting Head must be pressed onto formlining sheet!

Assembly

1. Screw in moving spigot (6.2) of the Lifting Traverse (6) as far as possible. (Fig. A6.09)

2. From the assembly level, guide the rope which had been previously attached to the Lifting Head (11) along the side of the table to the box out on the moving pin. (Fig. A6.10)

3. Pull Lifting Head with the rope and suspend it on the moving pin (6.2). (Fig. A6.11)

4. Unscrew the moving pin (6.2) for securing the Lifting Head (11) as far as possible. (Fig. A6.12)

Fig. A6.09

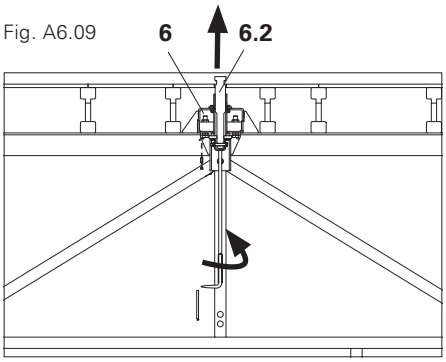

Fig. A6.10

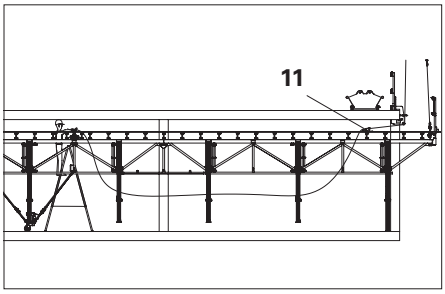

Fig. A6.11

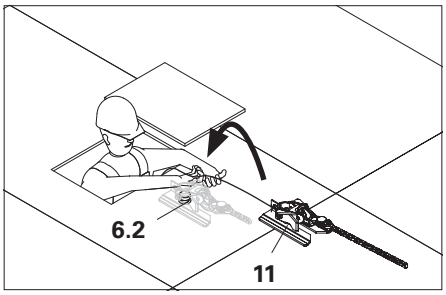

Fig. A6.12

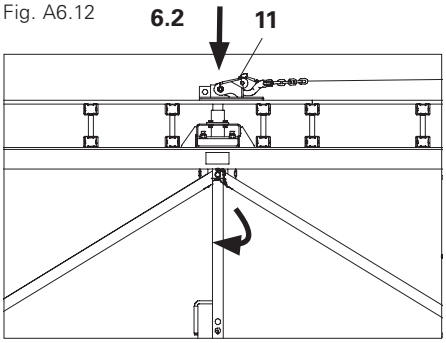

Transportation

Required chain lengths: see Table.

Ensure that the chain is neither twisted nor knotted!
The 1-sling rear chain must run over the Chain Guidance Shoe!
During the entire moving procedure, the main crane rope must be in a vertical position!
Remove any obstacles from the exit path.

Minimum crane hook height above the table depending on the length of the table.

Table length [m]	Height above the table [m]
6,00	12,00
7,60	11,70
9,00	11,70
10,60	11,20
12,00	11,30
13,60	11,00
15,00	11,00
16,50	10,30
18,00	10,20
19,50	9,30
21,00	9,20
22,50	7,80
24,00	7,70

A6 Moving

Moving procedure

Follow Instructions for Use!
Ensure that the chain is neither twisted nor knotted!
1-sling rear chain must run over the Chain Guidance Shoe!
During the entire moving procedure, the main crane rope must be in a vertical position!
Remove any obstacles from the exit path.

1. Suspend crane hook on the Lifting Mechanism. The operator is in a safe position on the top slab.

2. Pul slowly upwards with the crane until the chains are tensioned. The rear chain (13.3) must run over the Chain Guidance Shoe. Check the chains. (Fig. A613 + A6.14)

3. Keep the SKYTABLE table in a horizontal position using the remote control device (13.1). With the buttons (13.2) and (13.3), pull the chain backwards and forwards. (Fig. A6.15)

4. Continue to lift crane hook until front end of table lifts off the ground.

5. Move SKYTABLE table out and simultaneously bring forward the chain (13.2) by pressing the button (13.2).

6. At the same time, the rear chain (13.3) pulls the SKYTABLE table out of the building.

7. Slowly move out the SKYTABLE table on the rollers (9a, 9b, 9c, 9d) till the table lifts off the ground and is outside of the building. (Fig. A6.16)

Fig. A6.13

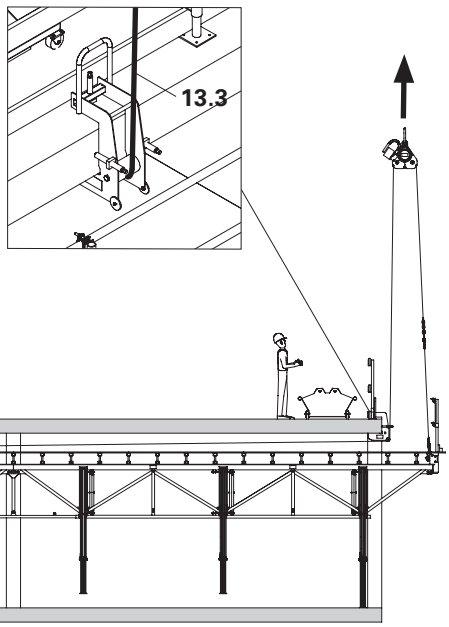

Fig. A6.14

Fig. A6.15

Fig. A6.16

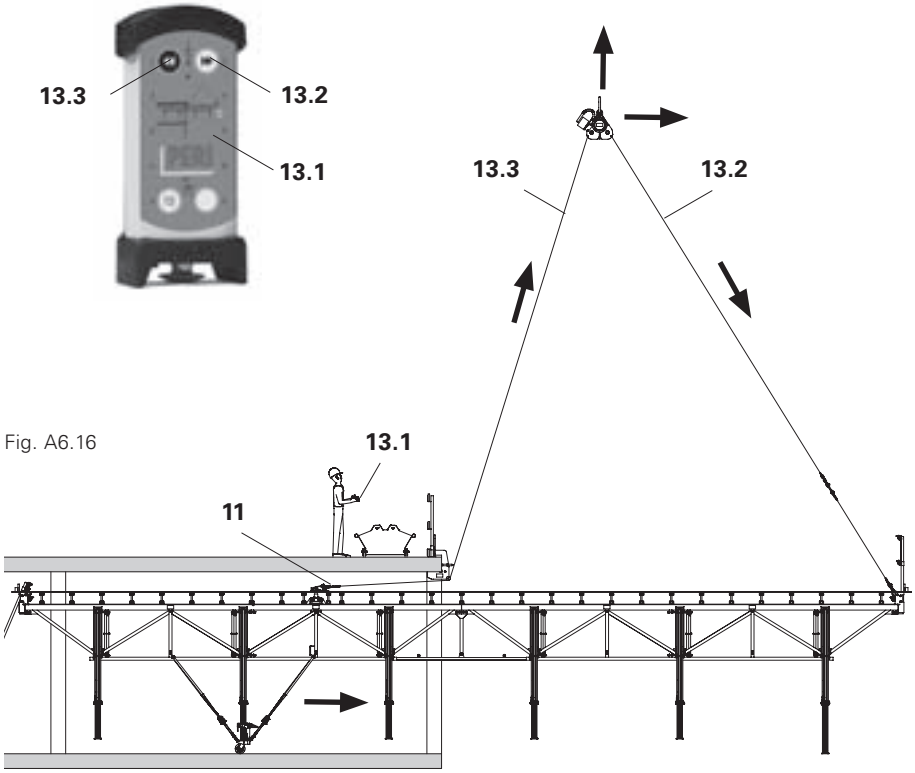

A6 Moving

Moving procedure

8. Slowly lift the SKYTABLE table until it is "flying".
The Lifting Mechanism STM (13) is positioned over the load centre and the SKYTABLE table is suspended horizontally. (Fig. A6.17)

Fig. A6.17

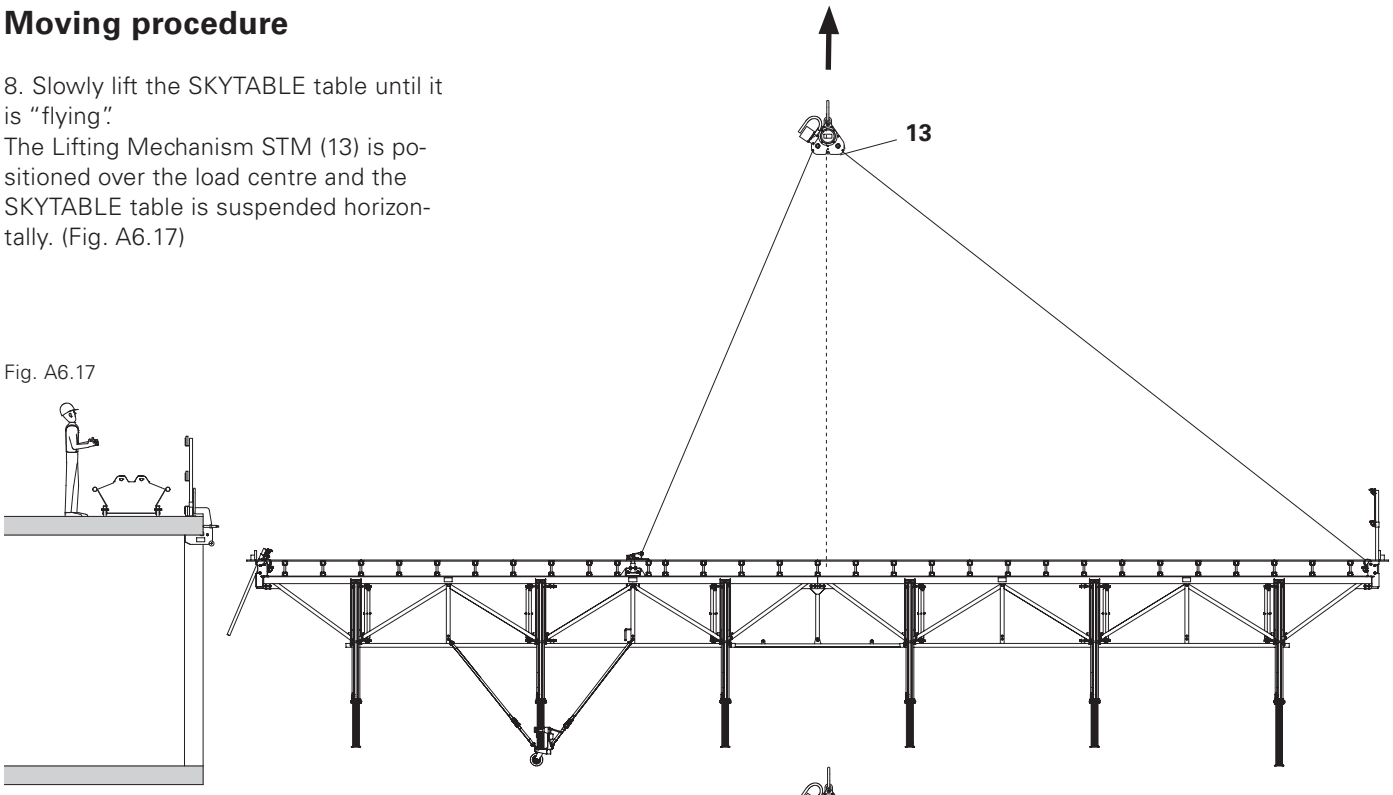

9. Move SKYTABLE table completely out of the building and transport to the next place of use. (Fig. A6.18)

Fig. A6.18

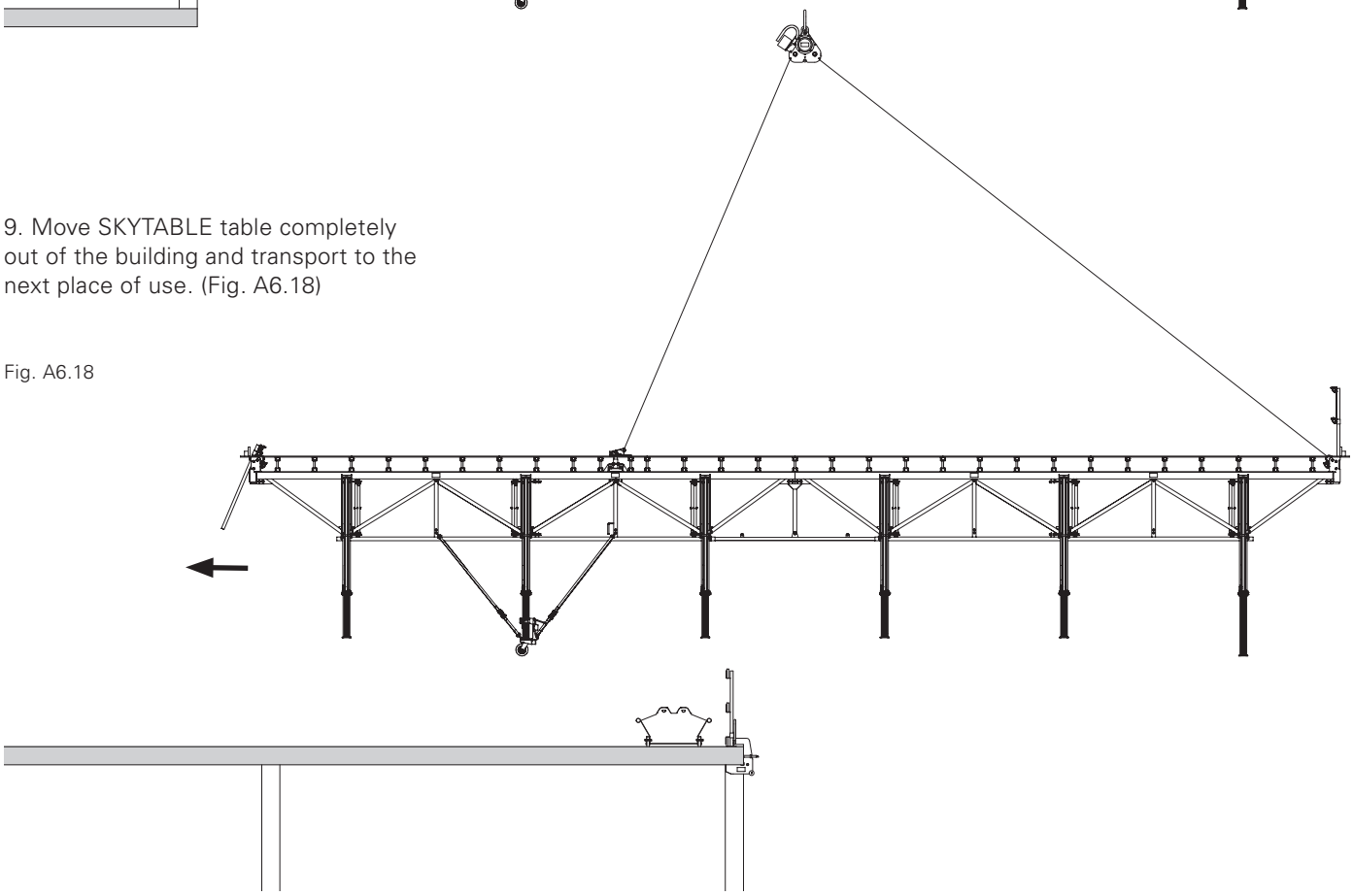

A6 Moving

SKYTABLE table positioned with the crane

1. Check all quick lowering devices.

The red lever (5.1) must be in a horizontal position. (Fig. A6.22)
When lifting the MULTIPROP prop, the lever falls to a horizontal position.

2. Position the SKYTABLE table with the crane and spindle out the required props for ensuring stability.
(Fig. A6.19)
Utilisation height + approx. 3 cm. Check with measuring tape (subsequent lowering is easier).

3. From a secure position, lift up the guardrail (8) and lower into in the Crane Eye Adapter STA (7).
(Fig. A6.20)

4. Remove crane lifting gear and put Lifting Head (11) with chain (13.3), chain (13.2) and Lifting Mechanism STM (13) in the chain casing. (Fig. A6.21)

5. Level SKYTABLE table, spindle out the remaining props and remove rollers (9a, 9b, 9c, 9d).

6. Set up other tables in the same way, mount end-to-end guradrails, close infill areas and install stopend formwork.
(Fig. A6.23)

The slab is shuttered.

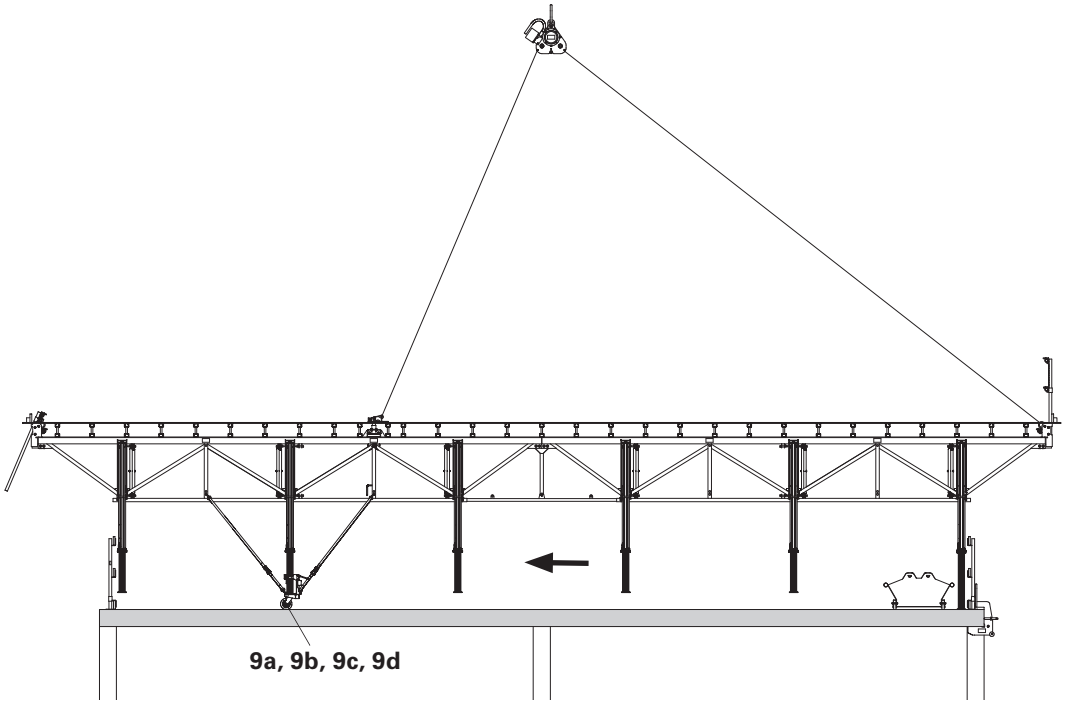

Fig. A6.19

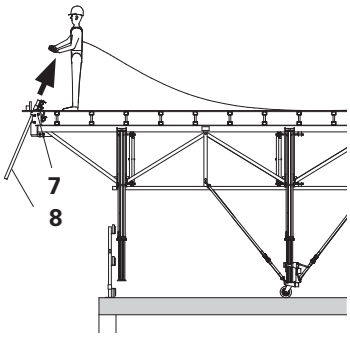

Fig. A6.20

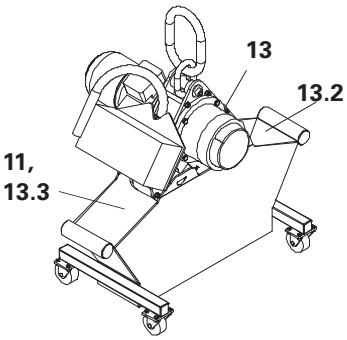

Fig. A6.21

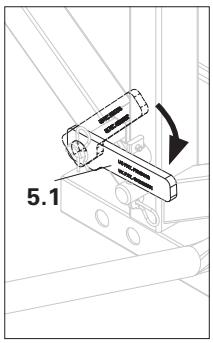

Fig. A6.22

A6 Moving

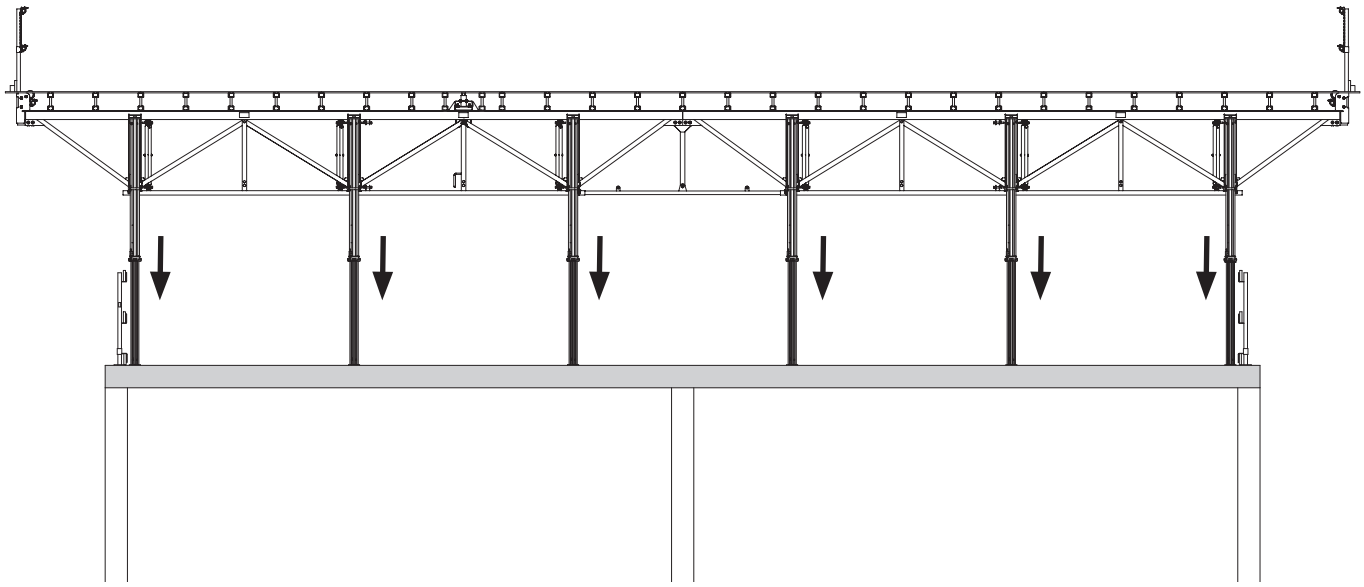

Fig. A6.23

SKYTABLE table positioned without the crane

For positioning without a crane, additional rollers must be installed.
See Table combinations for position.
The Triple Roller ST (9d) is shown in the illustration. (Fig. A6.24)
The table can be finely adjusted.

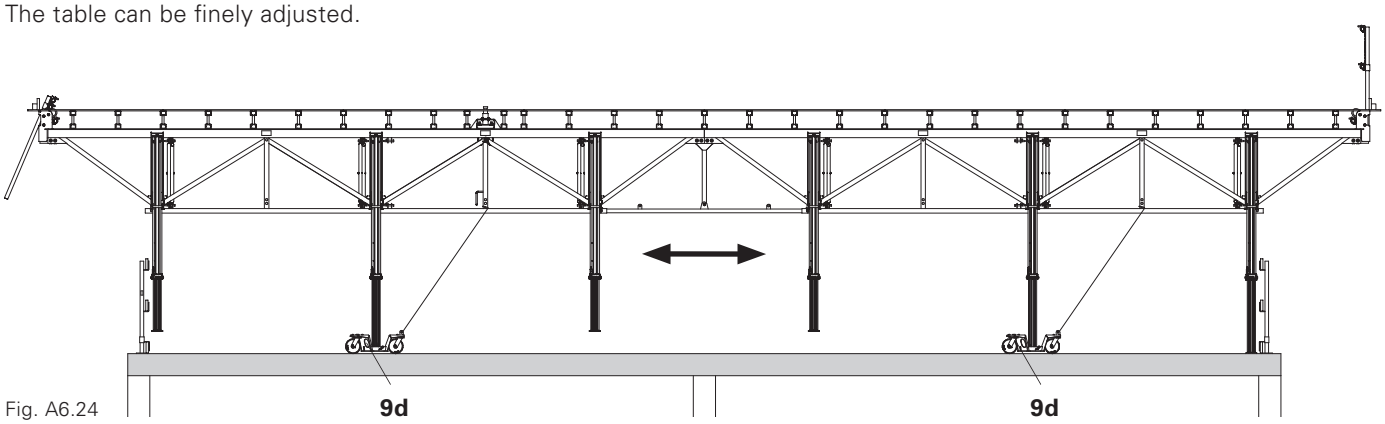

Fig. A6.24

A7 Special applications

SKYTABLE table, L = 6.00 m

Connect the Lifting Traverse STL (6) to the separate connection (1.1).
(Fig. A7.01)
Install rollers (9a, 9b, 9c, 9d) on the last pair of props. (Fig. A7.02)

For providing the SKYDECK table stability against overturning during mounting of the rollers, an additional MP prop (17) is attached. (Fig. A7.03 - 04)

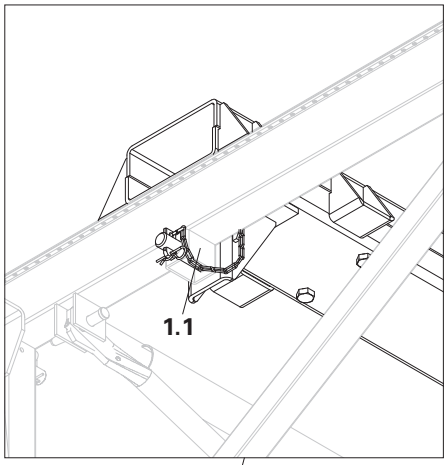

Fig. A7.01

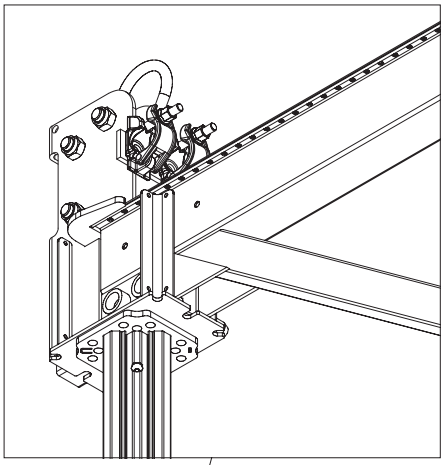

Fig. A7.03

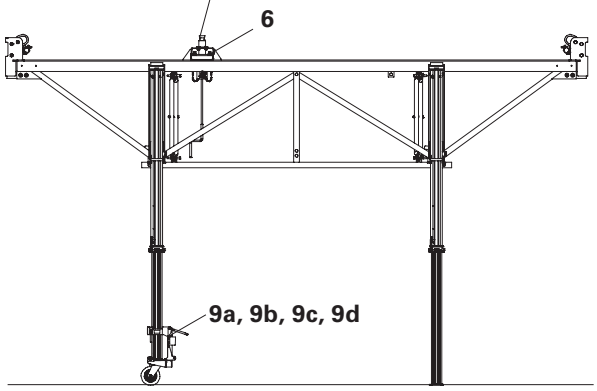

Fig. A7.02

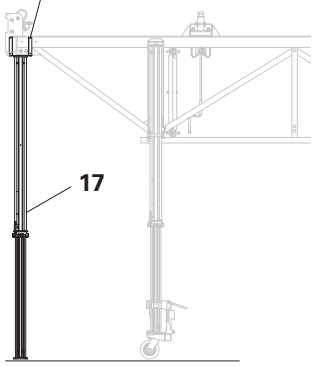

Fig. A7.04

SKYTABLE table, L = 9.00 m

Install Lifting Traverse STL (6) as shown in the Table Combinations.
Install rollers (9a, 9b, 9c, 9d) on the last pair of props and brace.

For providing the SKYDECK table stability against overturning during mounting of the rollers, an additional MP prop (17) is attached.

Fig. A7.05

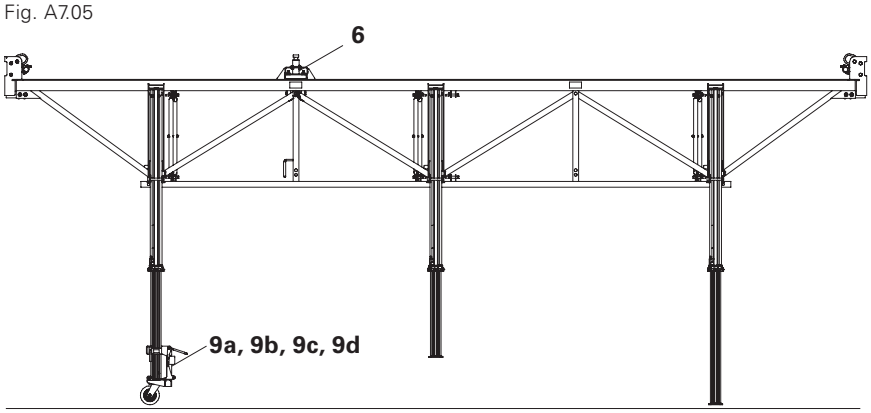

A7 Special applications

Asymmetrical tables

In order to keep asymmetrical tables balanced during moving, changes have to be made to the following components:
– Lifting traverse STL
– Chain lifting gear
– Chain Guidance Shoe STMS
(Fig. A7.06)

Lifting Traverse STL
The Lifting Traverse Crane Eye slidable ST has to be mounted here.
Offset dimension X: see Table.

Assembly
1. Remove bolts M 20, SW 30 (21.1).
2. Push Lifting Traverse Crane Eye slidable ST (21) over the Lifting Traverse STL (6) so that the pipe (21.2) points in the direction of moving out and shifts the dimension X to the asymmetrical side.
3. Insert M 20 bolts, SW 30 (21.1) and tighten.
4. Dismantle moving pin with crank from the Lifting Traverse STL and install in Lifting Traverse Crane Eye slidable ST (21).
(Fig. A7.07)

Chain lifting gear:
Shorten one crane sling (13.2) and adapt to new X-axis. Intersection point of the chain lifting gear = X-axis.
(Fig. A7.08)

Shortening the chains: see Instructions for Use Lifting Mechanism STM!
The table must be suspended horizontally!
Determine centre of gravity through "trial and error"!

Chain Guidance Shoe STMS:
Move Chain Guidance Shoe STMS (12) to X-axis. (Fig. A7.08)

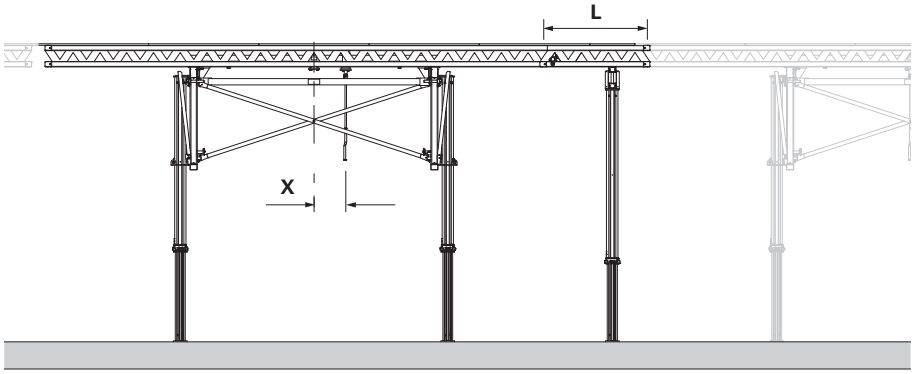

Fig. A7.06

Offset dimension X is dependent on the table weight

	Table weight [kN]						
	59,10	56,20	52,90	49,90	47,30	45,00	42,90
X [cm]	12	20	30	40	50	60	70

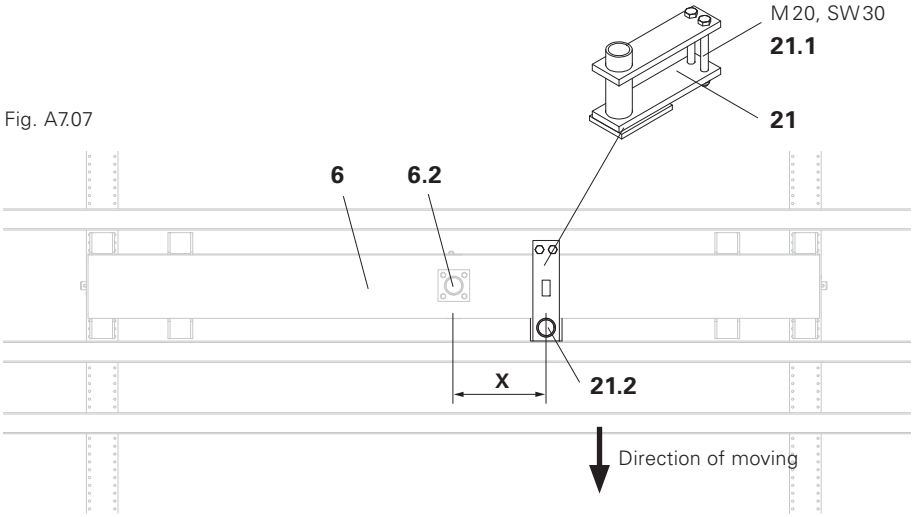

Fig. A7.07

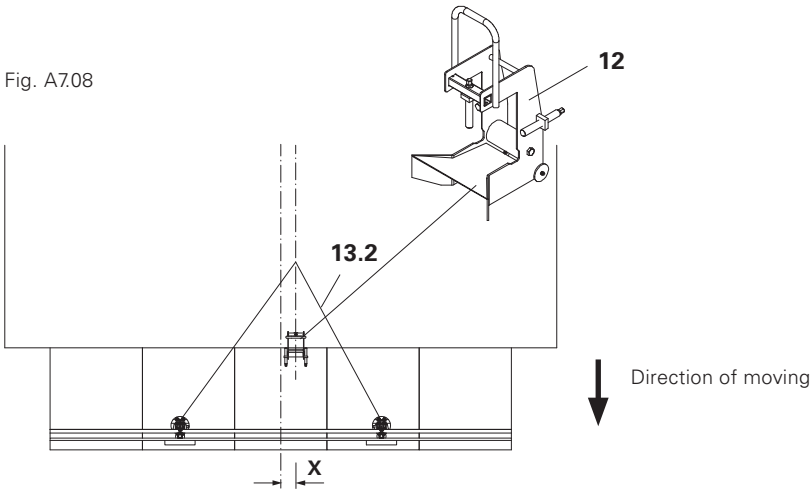

Fig. A7.08

A7 Special applications

Storey heights ≥ 5.15 m

For storey heights ≥ 5.15 m, the PERI MULTIPROP system with extended MP props is used.

Take into consideration the type test for the MULTIPROP system!
Take into consideration the Assembly Instructions for the MULTIPROP system!

Assembly

1. Erect the MULTIPROP towers (17) according to the Assembly Instructions and then place in position.
2. Connect SKYTABLE table with the towers, see Assembly Instructions for MULTIPROP. (Fig. A7.09)

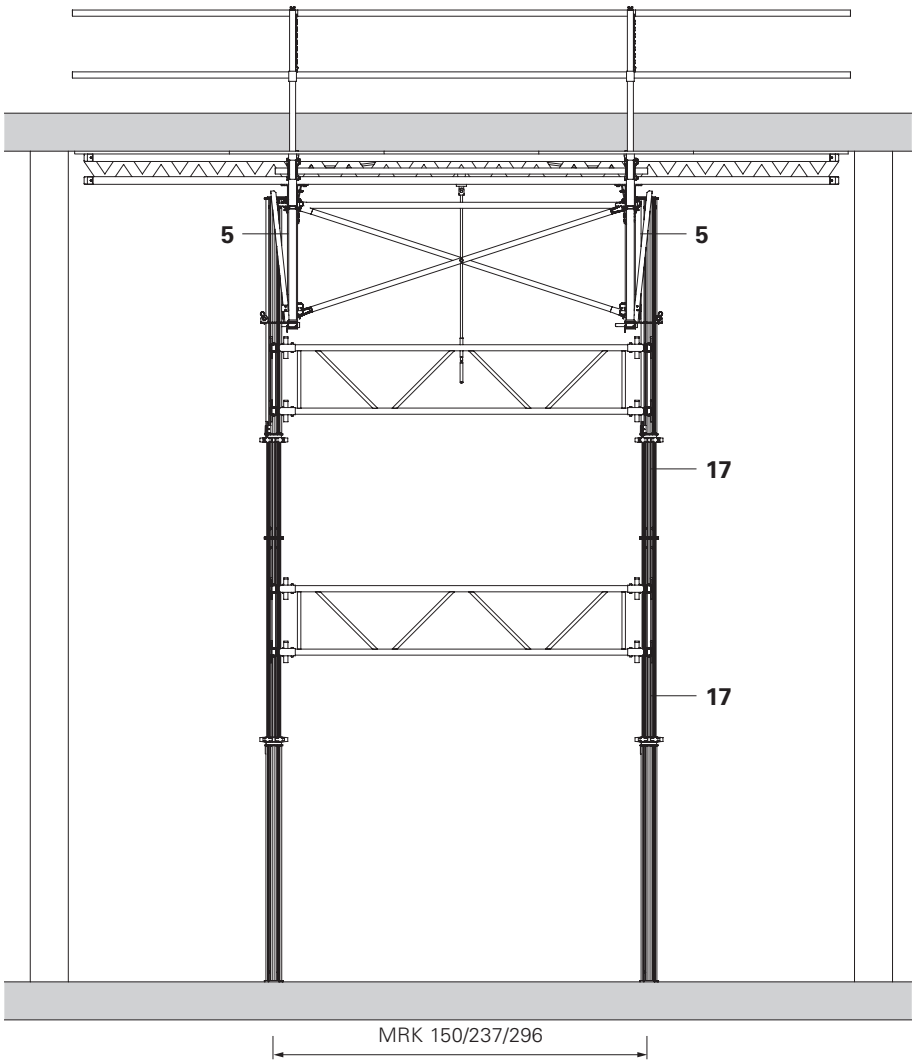

Fig. A7.09

A7 Special applications

Table combinations with 3 truss girder sections

Required components.
With positions for Lifting Adapter ST, Lowering Device STN and rollers (Single Roller STE, Rear Carriage STR, Triple Roller ST).
Permissible table width 9.00 m
Permissible weight 6.0 t (table length 13.50 m ≤ 5.5 t)

Table length [m]	Truss Girder STT 168*	Truss Girder STT 592	Truss Girder STT 888	Truss Connector STC	Beam Truss ST*
9,00			3		
10,60			3		3
12,00		6		3	
13,50	3	6		3	
15,00		3	3	3	

* always at the end of the table

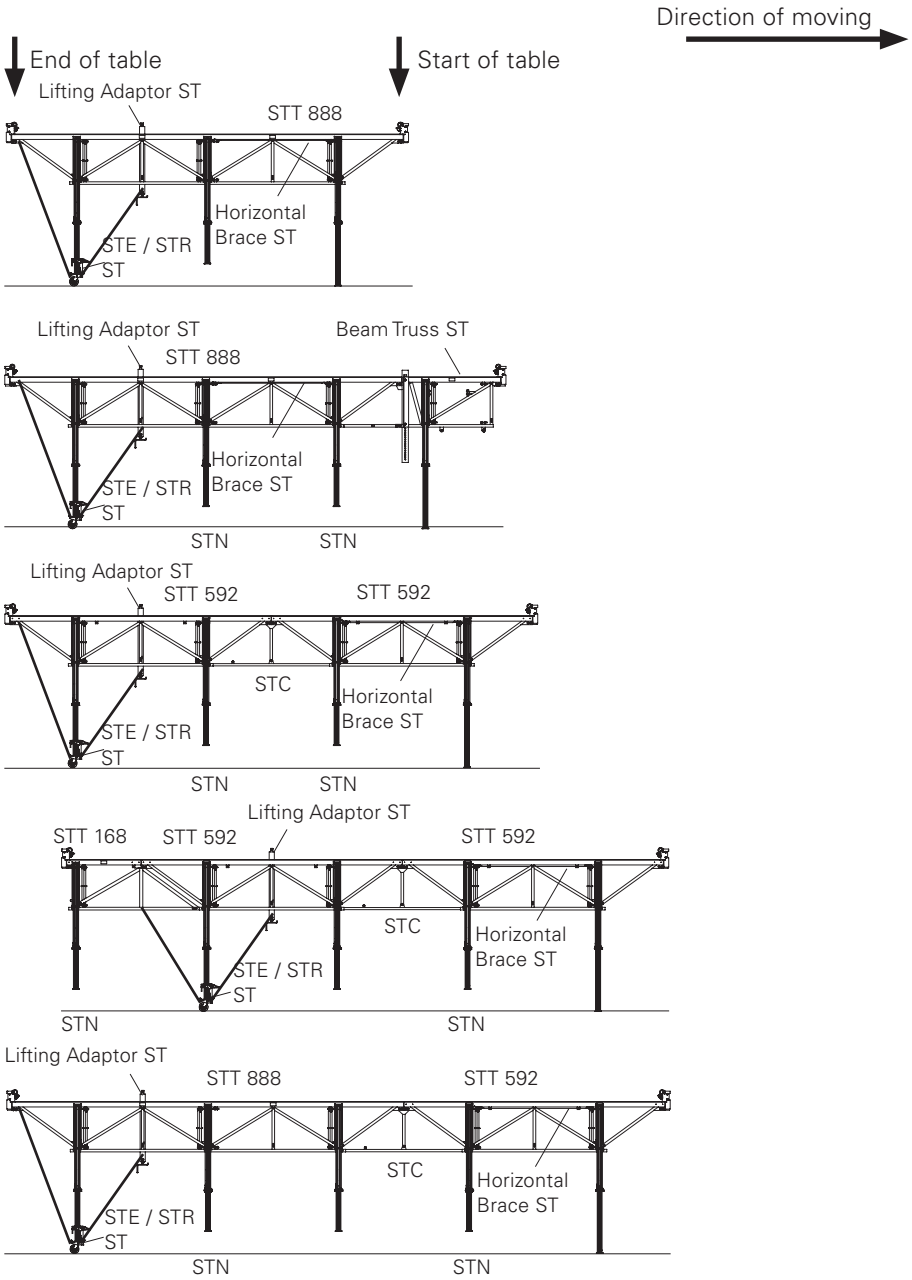

A7 Special applications

SKYTABLE table with 3 truss sections

Assembly of table
1. Install Horizontal Brace ST (23) additionally and before the Diagonal Brace and Spreader Tube, see below.
2. Install Spreader Tube STST (4) above and below, see A2 Diagonal Brace.
3. Install Lifting Adaptor (22), see Assembly of Lifting Adaptor ST.
4. Install Quick Lowering Device STQ (5) and MULTIPROP props (17) left and right offset on the middle Truss Girder STT, see A2.
(Fig. A7.11)

Assembly of Lifting Adaptor ST
1. Remove bolts Ø 30 (22.1) and screws M 30 (22.2). Divide Lifting Adaptor (22) into top and bottom parts.
2. Push top part from above over the Truss Girder and secure by means of the top pin and cotter pin.
3. Push bottom part from below over the Truss Girder.
4. Secure top and bottom parts with second pin, cotter pin and screws M 30.
(Fig. A7.10)

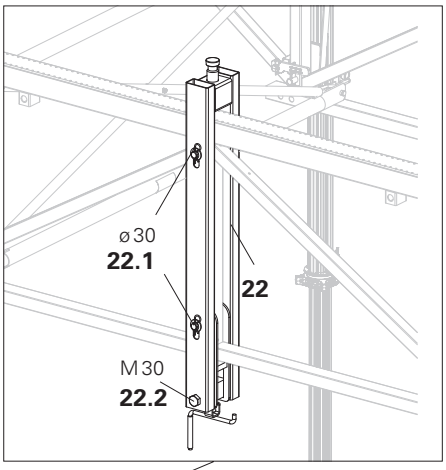

Fig. A7.10

Fig. A7.11

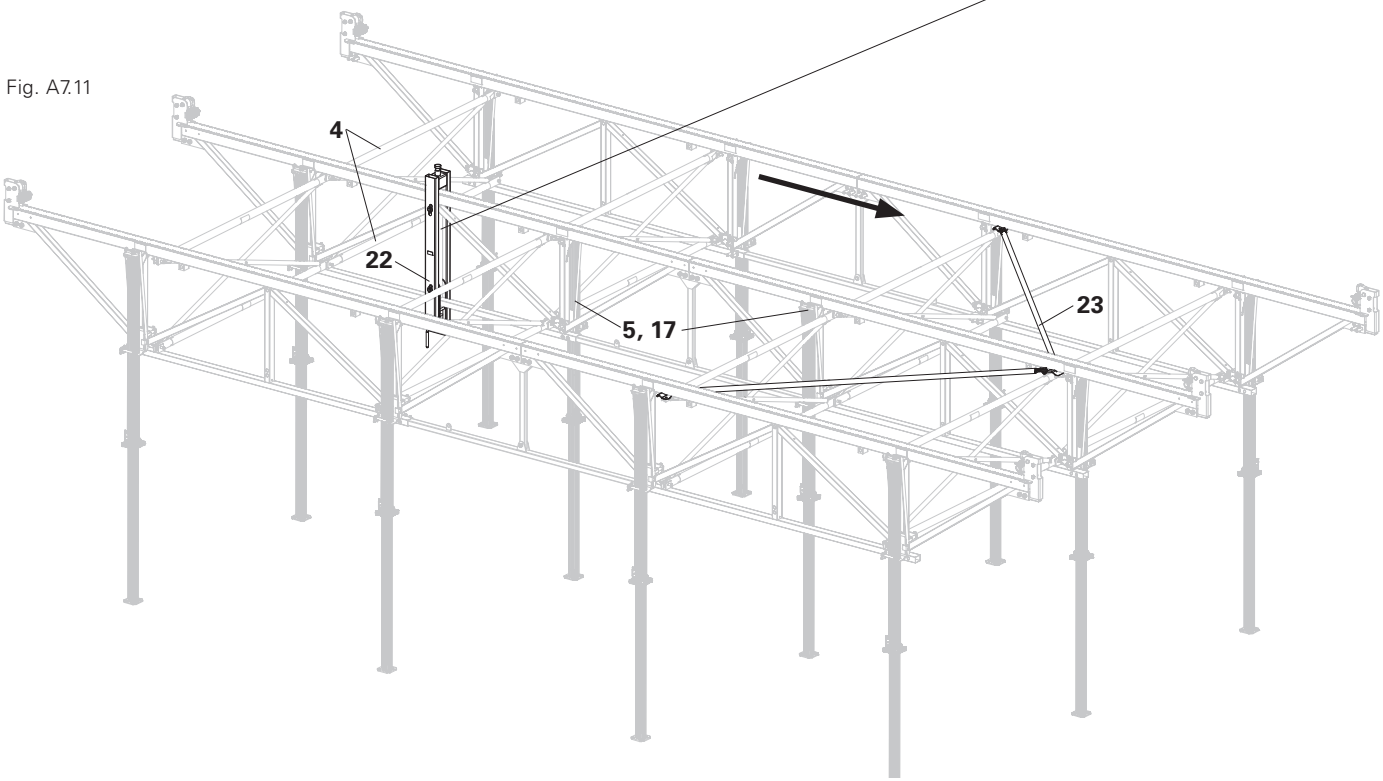

Depending on the application, the prop loads must be calculated for SKYTABLE tables with 3 truss sections -> different load distribution on the trusses!

Static system
Continuous girder with short cantilever

Jointed girder with long cantilever

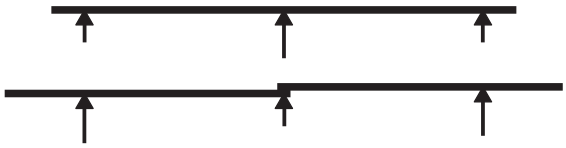

A7 Special applications

SKYTABLE table with 3 truss sections

Assembly of Horizontal Brace ST
1. Push gusset plate (23.1) onto the top chord of the middle Truss Girder STT via the Diagonal Brace connection. (Fig. A7.13 + A7.15)
2. Insert Spreader Tube STST and Diagonal Brace STD and secure with pin and cotter pin.
3. Push end plate (23.2) onto the outer Truss Girder via the Diagonal Brace connection. (Fig. A7.12 + A7.14)
4. Insert Spreader Tube STST and Diagonal Brace STD and secure with pin and cotter pin. (Fig. A7.14)

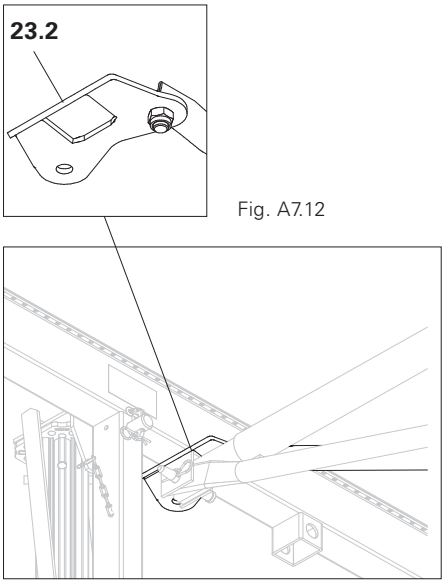

Fig. A7.12

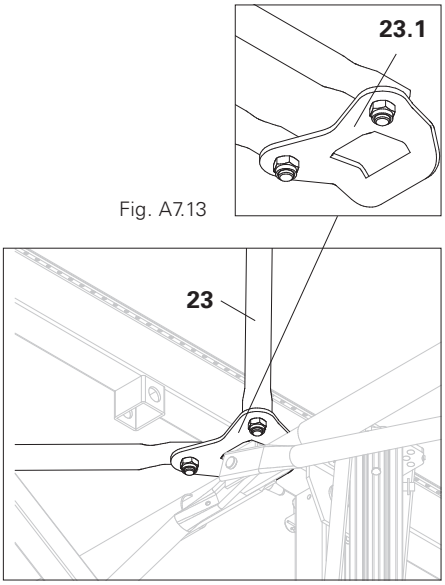

Fig. A7.13

Fig. A7.14

Fig. A7.15

Assembly of Chain Extension STV 120
For moving SKYTABLE tables with 3 truss sections, the Chain Extension STV 120 (26) is used.

1. Suspend the Chain Extension STV 120 (26) between the Crane Eye Adaptor STA and lifting chain of the Lifting Mechanism STM. (Fig. A7.16)

Fig. A7.16

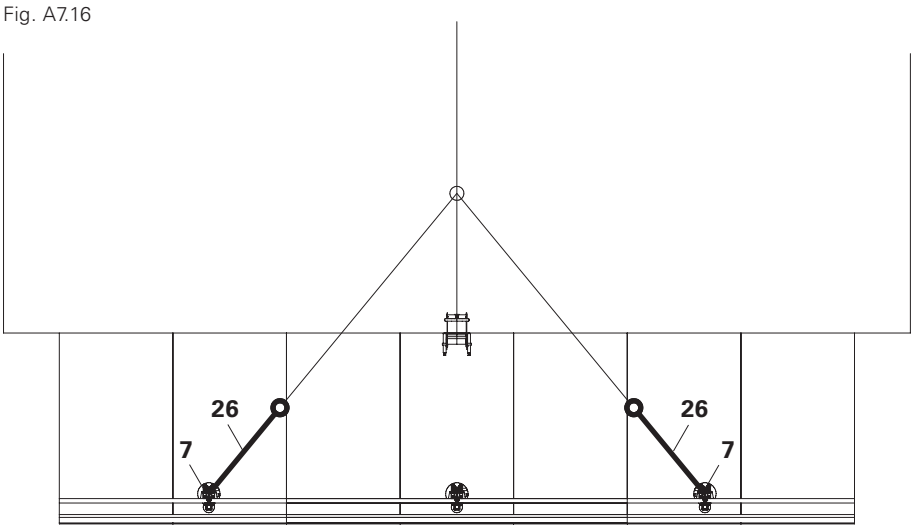

A7 Special applications

Beams

Ensure the concrete pressure is safely transferred!

Beams up to a maximum 75 cm high (without slab) adjustable in 5 cm increments and 60 cm wide are formed with the Beam Truss ST.
(Fig. A7.19)

Beam Truss ST
Preparation
Change Beam Truss ST (24) from transport position to assembly position and secure with hex. bolts and nuts M 24, SW 36 (24.1). (Fig. A7.18)

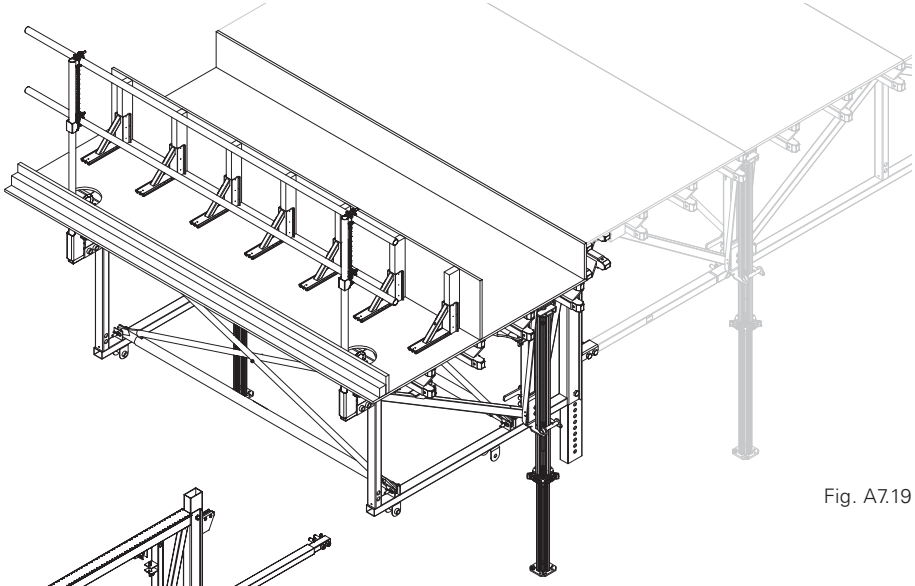

Fig. A7.19

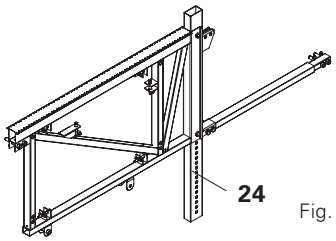

Fig. A7.18

Assembly
1. Mount Beam Truss ST (24) to Truss Girder STT using pins and cotter pins (24.1).
2. Mount Quick Lowering Device STQ (5) and MULTIPROP props (17).
3. Vertical bracing for the beam:
Two Diagonal Braces STD (3) and four Spreader Tubes STST (4) at front and rear.
4. Horizontal bracing for the beam:
With a Diagonal Brace (3).
5. Mount Crane Eye Adaptor STA (7) and guardrail (8).
6. Position and fix GT 24 girder (15) and plywood formlining.
7. Mount stopend formwork.
(Fig. A7.20)

The beam is ready.

Assembly of the table elements, see A2.

Fig. A7.20

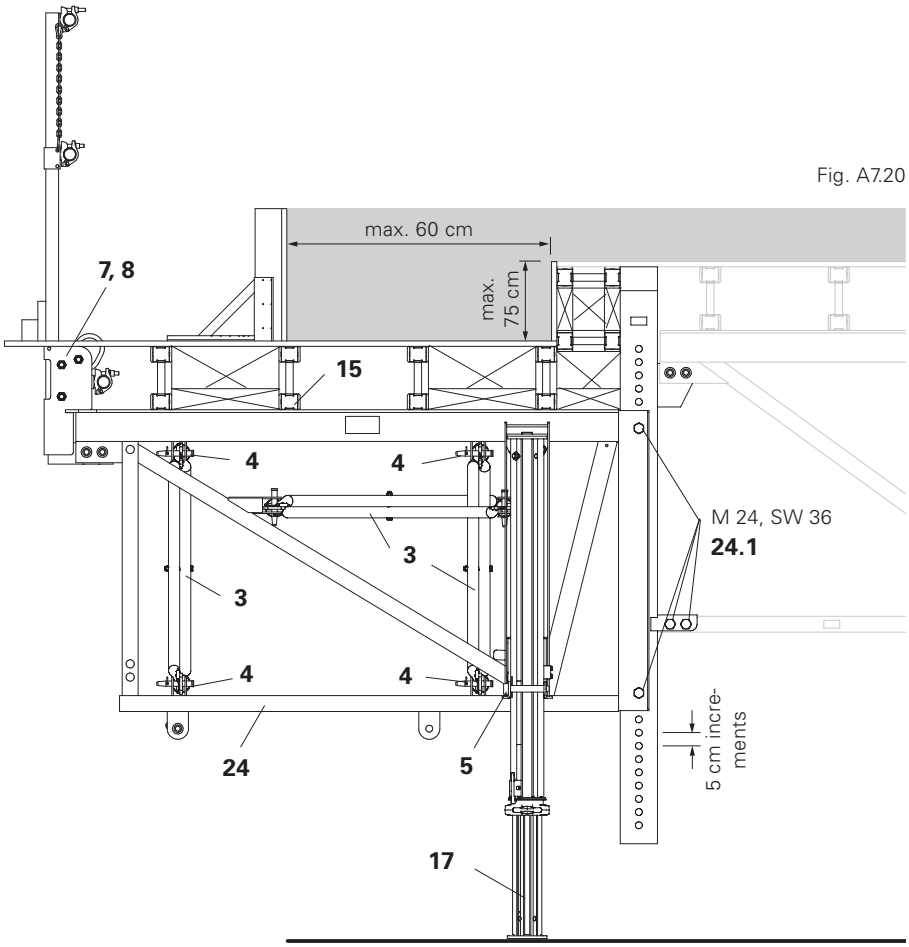

A7 Special applications

Missing support for the MULTIPROP

The bracing on the last MULTIPROP prop remians in position!

Diagonal Cross Connection STO
For use with missing support for the MULTIPROP prop. (Fig. A7.21)

The prop arrangement of the SKYTABLE table must be adapted accordingly if the support is missing (e.g. slab box-out or slab offsets).
(Fig. A7.22)
Instead, the respective prop must be put back one grid section. In this case, one additional Diagonal Brace STD (3) and Spreader Tube STST (4) are to be mounted to the Diagonal Cross Connection STO (25). (Fig. A7.22)

Assembly
1. Remove bolts (25.2) and stirrup (25.1).
2. From the outside, slide the Diagonal Cross Connection STO (25) next to the vertical strut onto the top and bottom chords. Recess area encloses the vertical strut.
3. Slide on the stirrup (25.1) from the inside.
5. Fasten Diagonal Brace STD (3) and Spreader Tube STST (4) with pins and cotter pins (25.2).
5. Mount the Quick Lowering Device STQ (5) and the MULTIPROP props (17). (Fig. A7.23 + A7.24)

The MULTIPROP prop is moved.

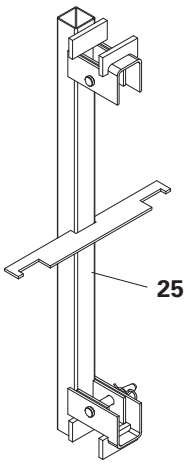

Fig. A7.21

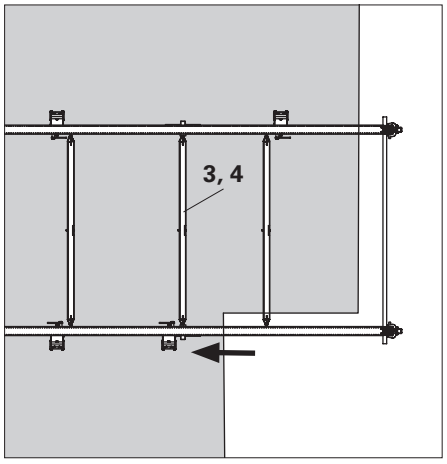

Fig. A7.22

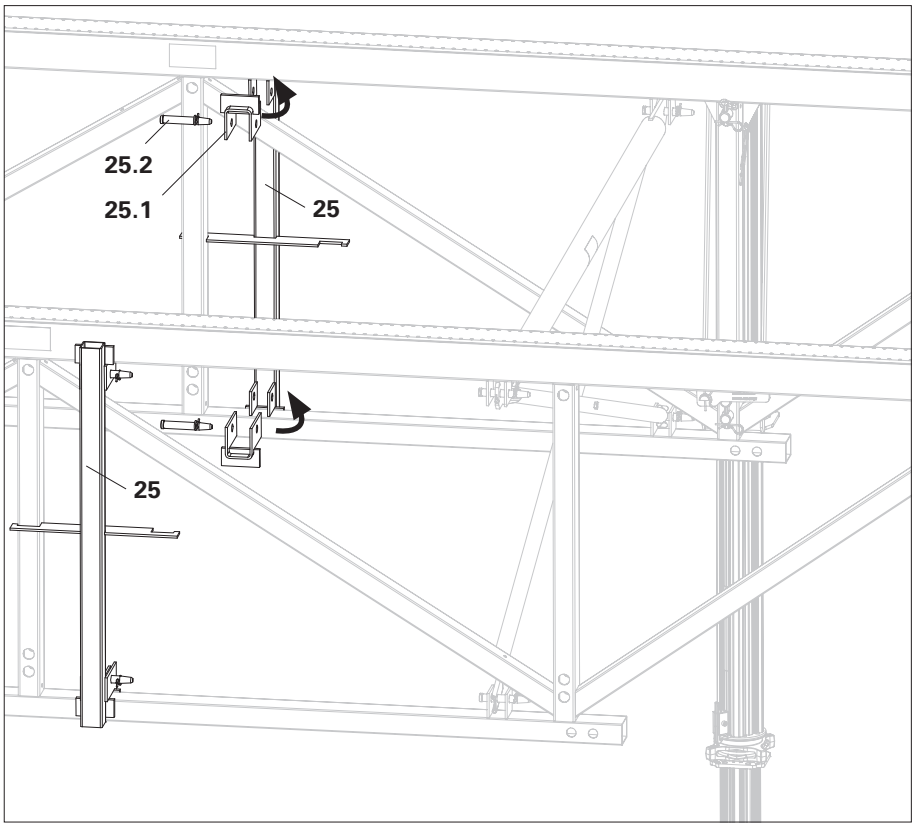

Fig. A7.23

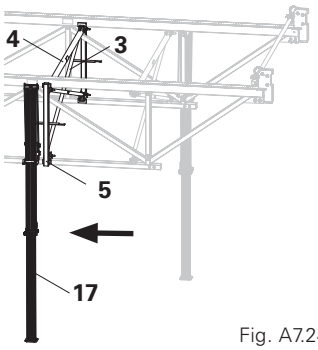

Fig. A7.24

Prop loads [kN]

Existing prop loads
Metric system

Slab thickness [m]	Live load [kN/m²]	Concrete [kN/m²]	GT 24 Girder + Plywood [kN/m²]	Permissible width of influence of the truss section [m]							
				0,92	1,22	1,53	1,83	2,14	2,44	2,75	3,05
				Dead load of truss (distributed over the whole area)							
				0,55	0,41	0,33	0,27	0,23	0,20	0,18	0,16
0,10	2,4	2,4	0,24	15,0	19,5	24,0	28,5	33,0	37,5	42,0	46,5
0,12	2,4	2,8	0,24	16,3	21,2	26,1	31,0	36,0	40,9	45,8	50,8
0,14	2,4	3,3	0,24	17,5	22,9	28,2	33,6	39,0	44,3	49,7	55,0
0,16	2,4	3,8	0,24	18,8	24,6	30,4	36,2	41,9	47,7	53,5	59,3
0,18	2,4	4,2	0,24	20,1	26,3	32,5	38,7	44,9	51,1	57,3	63,5
0,20	2,4	4,7	0,24	21,4	28,0	34,6	41,3	47,9	54,5	61,2	67,8
0,22	2,4	5,2	0,24	22,6	29,7	36,8	43,8	50,9	57,9	65,0	72,0
0,24	2,4	5,7	0,24	23,9	31,4	38,9	46,4	53,8	61,3	68,8	76,3
0,26	2,4	6,1	0,24	25,2	33,1	41,0	48,9	56,8	64,7	72,6	80,5
0,28	2,4	6,6	0,24	26,5	34,8	43,1	51,5	59,8	68,1	76,5	84,8
0,30	2,4	7,1	0,24	27,8	36,5	45,3	54,0	62,8	71,5	80,3	89,1
0,32	2,4	7,5	0,24	29,0	38,2	47,4	56,6	65,8	74,9	84,1	-
0,34	2,4	8,0	0,24	30,3	39,9	49,5	59,1	68,7	78,3	88,0	-
0,36	2,4	8,5	0,24	31,6	41,6	51,7	61,7	71,7	81,8	-	-
0,38	2,4	9,0	0,24	32,9	43,3	53,8	64,2	74,7	85,2	-	-
0,40	2,4	9,4	0,24	34,1	45,0	55,9	66,8	77,7	88,6	-	-

Existing prop loads
Anglo-American system

Slab thickness [in]	Live load [psf]	Concrete [psf]	GT 24 Girder + Plywood [psf]	Permissible width of influence of the truss section [ft]							
				3	4	5	6	7	8	9	10
				Dead load of truss (distributed over the whole area)							
				11.4	8.6	6.9	5.7	4.9	4.3	3.8	3.4
4	50	50.0	4.9	3.4	4.4	5.4	6.4	7.5	8.5	9.5	10.5
5	50	62.5	4.9	3.8	4.9	6.0	7.2	8.3	9.5	10.6	11.7
6	50	75.0	4.9	4.1	5.4	6.6	7.9	9.2	10.4	11.7	13.0
7	50	87.5	4.9	4.5	5.9	7.2	8.6	10.0	11.4	12.8	14.2
8	50	100.0	4.9	4.8	6.4	7.9	9.4	10.9	12.4	13.9	15.4
9	50	112.5	4.9	5.2	6.8	8.5	10.1	11.7	13.3	15.0	16.6
10	50	125.0	4.9	5.6	7.3	9.1	10.8	12.6	14.3	16.1	17.8
11	50	137.5	4.9	5.9	7.8	9.7	11.5	13.4	15.3	17.2	19.0
12	50	150.0	4.9	6.3	8.3	10.3	12.3	14.3	16.3	18.2	20.2
13	50	162.5	4.9	6.7	8.8	10.9	13.0	15.1	17.2	19.3	-
14	50	175.0	4.9	7.0	9.3	11.5	13.7	16.0	18.2	-	-
15	50	187.5	4.9	7.4	9.8	12.1	14.5	16.8	19.2	-	-
16	50	200.0	4.9	7.8	10.2	12.7	15.2	17.7	20.1	-	-

Load assumptions:
- Symmetrical table
- Uniform load distribution on the truss girder
- Length of influence of the MULTIPROP approx. 2.96 m
- Formlining weight of 11.5 kg/m²
- GT 24 girder spacing 48.8 cm

Additional steps for stability against overturning:
E.g. concreting in several layers or additional supports at the edge in the marked areas of the tables are required.

Truss girder spacing 1.20 m
Truss girder spacing 2.07 m
Truss girder spacing 2.66 m

Formlining

Width compensation
Permissible prop width L [m, in] for the formlining

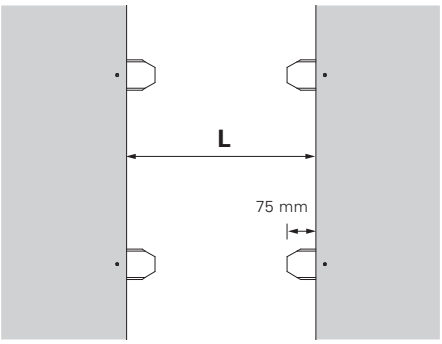

Slab thickness [m]	Finply 19 mm (¾")		Beto 19 mm (¾")		Birch 19 mm (¾")	
	Width compensation	Length compensation	Width compensation	Length compensation	Width compensation	Length compensation
0,20	0,45	0,56	0,49	0,57	0,51	0,59
0,25	0,36	0,52	0,38	0,53	0,41	0,54
0,30	0,25	0,49	0,28	0,50	0,34	0,51
0,35	0,25	0,47	0,25	0,48	0,25	0,49
0,40	0,25	0,45	0,25	0,46	0,25	0,47
0,45	0,25	0,43	0,25	0,44	0,25	0,45
0,50	0,25	0,41	0,25	0,42	0,25	0,43

Length compensation
Permissible prop width L [m, in] for the formlining

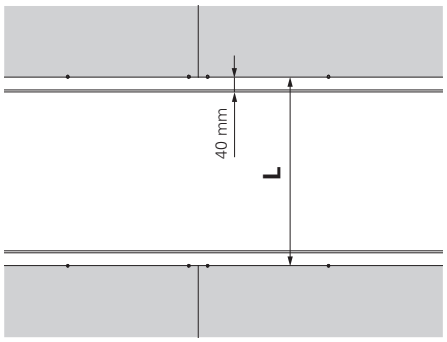

Slab thickness [in]	Finply ¾" (19 mm)		Beto ¾" (19 mm)		Birch ¾" (19 mm)	
	Width compensation	Length compensation	Width compensation	Length compensation	Width compensation	Length compensation
8	17.31	21.94	18.70	22.44	19.91	22.94
10	13.78	20.37	14.71	20.83	15.73	21.29
12	9.84	19.17	9.88	19.60	13.14	20.04
14	9.84	18.21	9.84	18.62	9.84	19.03
16	9.84	17.41	9.84	17.81	9.84	18.20
18	9.84	16.74	9.84	17.12	9.84	17.50
20	9.84	16.17	9.84	16.53	9.84	16.90

Slab thickness [m]	Finply 21 mm		PERI Beto 21 mm		PERI Spruce 21 mm	
	Width compensation	Length compensation	Width compensation	Length compensation	Width compensation	Length compensation
0,20	0,55	0,62	0,55	0,62	0,48	0,57
0,25	0,49	0,57	0,48	0,57	0,38	0,53
0,30	0,40	0,54	0,40	0,54	0,28	0,50
0,35	0,35	0,52	0,34	0,51	0,25	0,48
0,40	0,25	0,49	0,25	0,49	0,25	0,46
0,45	0,25	0,47	0,25	0,47	0,25	0,44
0,50	0,25	0,46	0,25	0,46	0,25	0,42

Where applicable, deflection greater than l/300

Formlining

Allowable Span for 3/4“ Plywood [in]

Slab thickness [in]	Olympic panel				Georgia-Pacyfic			
	parallel		perpendicular		parallel		perpendicular	
	L / 270	L / 360	L / 270	L / 360	L / 270	L / 360	L / 270	L / 360
1	24.0	24.0	24.0	24.0	24.0	24.0	19.2	19.2
2	24.0	24.0	24.0	24.0	24.0	24.0	19.2	19.2
3	24.0	24.0	24.0	24.0	24.0	24.0	19.2	19.2
4	24.0	24.0	24.0	24.0	24.0	24.0	19.2	19.2
5	24.0	24.0	24.0	19.2	24.0	24.0	19.2	19.2
6	24.0	24.0	24.0	19.2	24.0	19.2	19.2	19.2
7	24.0	24.0	24.0	19.2	24.0	19.2	19.2	19.2
8	24.0	24.0	19.2	19.2	24.0	19.2	19.2	16.0
9	24.0	19.2	19.2	19.2	19.2	19.2	16.0	16.0
10	24.0	19.2	19.2	19.2	19.2	19.2	16.0	16.0
11	24.0	19.2	19.2	19.2	19.2	19.2	16.0	16.0
12	24.0	19.2	19.2	19.2	19.2	19.2	16.0	12.0
13	19.2	19.2	19.2	19.2	19.2	19.2	16.0	12.0
14	19.2	19.2	19.2	16.0	19.2	16.0	16.0	12.0
15	19.2	19.2	19.2	16.0	19.2	16.0	16.0	12.0
16	19.2	19.2	19.2	16.0	19.2	16.0	16.0	12.0

Item no.	Weight kg		
107592	232,000	**Truss Girder STT 888, galv.**	**Complete with** 4 pc. 107579 Pin Ø 25 x 154, galv. 8 pc. 105400 Pin Ø 20 x 140, galv. 12 pc. 018060 Cotter Pin 4/1, galv.

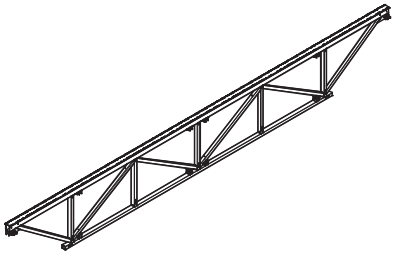

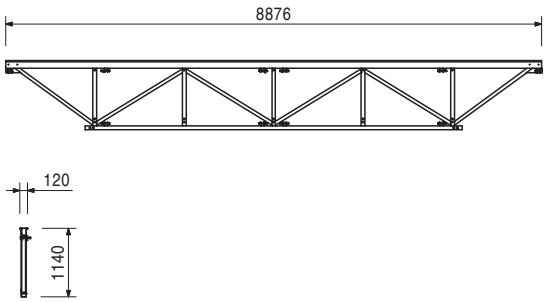

107599	147,000	**Truss Girder STT 592, galv.**	**Complete with** 4 pc. 107579 Pin Ø 25 x 154, galv. 4 pc. 105400 Pin Ø 20 x 140, galv. 8 pc. 018060 Cotter Pin 4/1, galv.

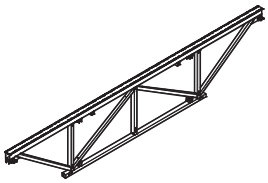

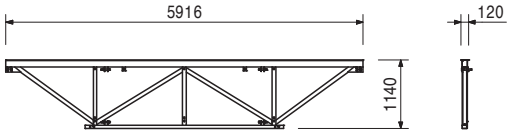

107800	83,000	**Truss Girder STT 168, galv.**	**Complete with** 4 pc. 107579 Pin Ø 25 x 154, galv. 2 pc. 105400 Pin Ø 20 x 140, galv. 6 pc. 018060 Cotter Pin 4/1, galv.

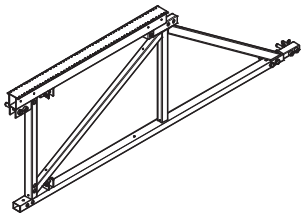

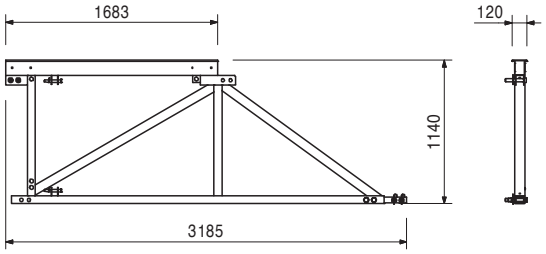

107667	31,500	**Truss Connector STC, galv.** For connecting 2 Truss Girder STT.	**Complete with** 4 pc. 107579 Pin Ø 25 x 154, galv. 4 pc. 018060 Cotter Pin 4/1, galv.

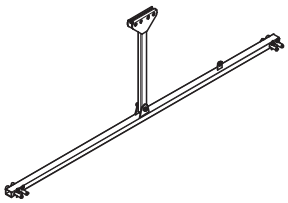

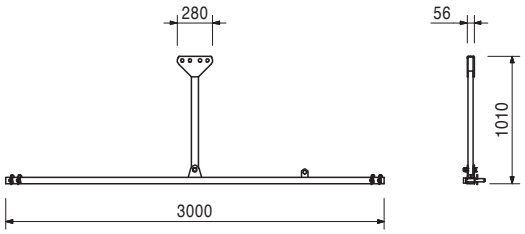

Item no.	Weight kg		L	X	Y
		Diagonal Brace STD, galv.			
107561	8,000	**Diagonal Brace STD 120 x 87**	1545	1204	870
107564	11,900	**Diagonal Brace STD 207 x 87**	2307	2072	870
107567	14,700	**Diagonal Brace STD 266 x 87**	2862	2664	870

For diagonal bracing of SKYTABLE.

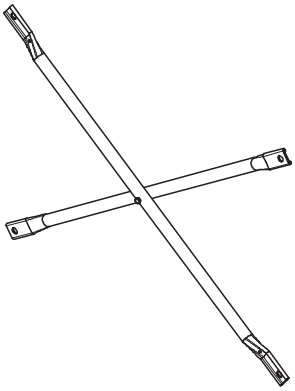

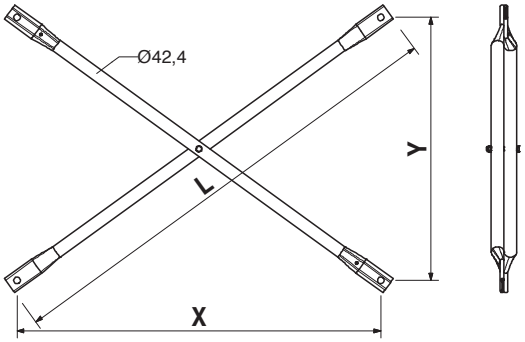

			L	X
		Spreader Tube STST, galv.		
108106	5,460	**Spreader Tube STST 120**	1264	1204
108105	9,920	**Spreader Tube STST 207**	2132	2072
107915	14,000	**Spreader Tube STST 266**	2724	2664

For horizontal bracing of SKYTABLE in diagonal frame construction.

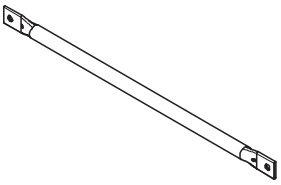

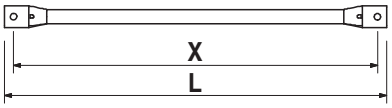

107641	20,700	**Quick Lowering Device STQ, galv.** For releasing loads by 20 mm. Connection between Truss Girder and MULTIPROP.	**Complete with** 1 pc. 715357 Pin Ø 16 x 150, galv. 5 pc. 018060 Cotter Pin 4/1, galv.

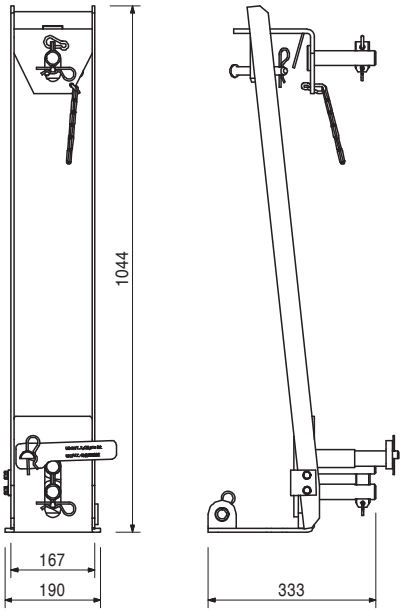

Item no.	Weight kg	
108133	0,833	**Connector STG 24, galv.** For connecting the GT 24 Girders to the Truss Girder STT near the props. **Note** 2 piece per fixing point. **Technical Data** The Connector STG 24 must always be secured with nails!

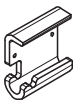

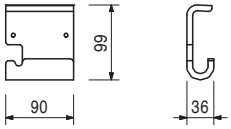

107690	12,100	**Crane Eye Adaptor STA** For connecting Guardrail Post STP to the Truss Girder STT. As bracket for moving. **Technical Data** The load carrying point is balanced according to the Lifting Mechanism STM and permissible SKYTABLE data.

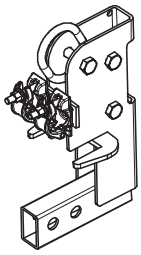

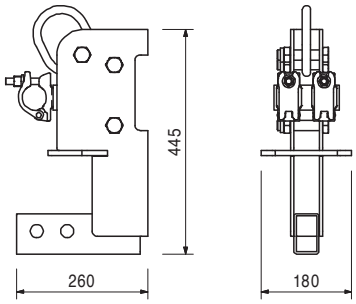

Accessories

107737	8,810	**Guardrail Post STP, galv.**

107737	8,810	**Guardrail Post STP, galv.** For use with Crane Eye Adaptor STA. **Technical Data** Guardrail height 1.10 m.

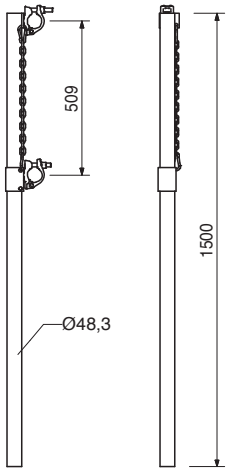

Item no.	Weight kg	
108188	3,440	**Tension Plate STMP** In conjunction with the Tension Belt STLB for transfering horizontal loads in the longitudinal direction of the table.

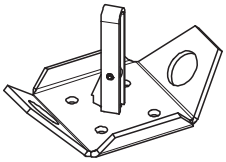

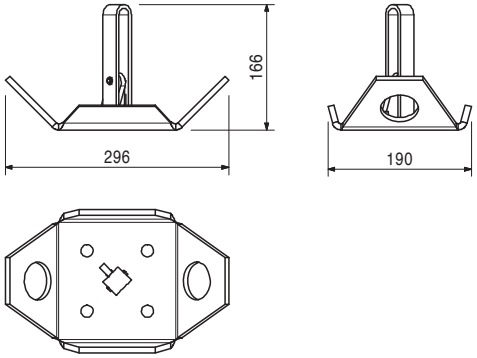

Accessories

107895	1,430	**Tension Belt STLB**

111777	57,700	**Lifting Adaptor ST** For moving PERI SKYTABLE with 3 shear frames.

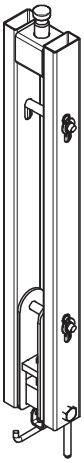

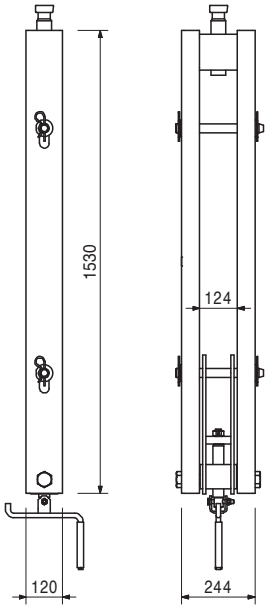

111773	31,000	**Horizontal Brace ST** For horizontal bracing of PERI SKYTABLE in the upper diagonal level at tables with 3 shear frames.

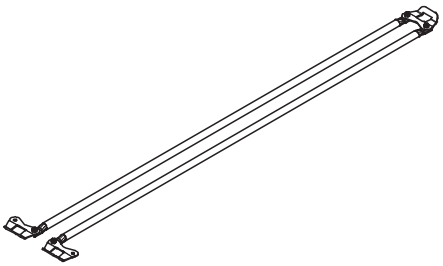

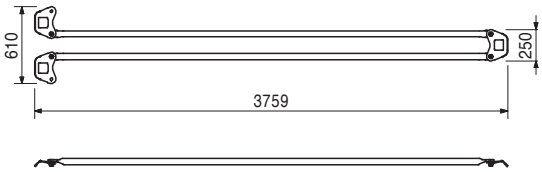

Item no.	Weight kg		
110832	12,000	**Diagonal Cross Connection STO** For the use of re-positioned MULTIPROP post shores on the Truss Girder STT.	**Complete with** 2 pc. 105400 Pin Ø 20 x 140, galv. 2 pc. 018060 Cotter Pin 4/1, galv.

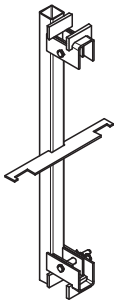

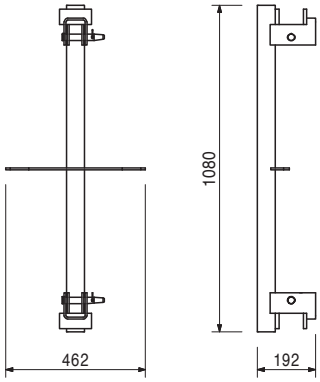

114965	13,600	**Telescopic Extension ST** For longitudinal compensations of 50 - 90 cm with additional support. Inserted into the top chord of the Truss Girder STT.	**Complete with** 1 pc. 107579 Pin Ø 25 x 154, galv. 1 pc. 018060 Cotter Pin 4/1, galv.

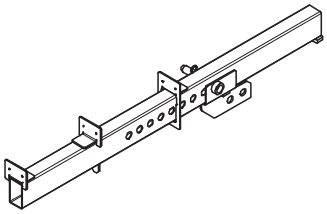

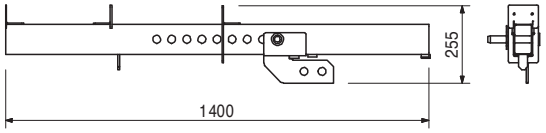

112175	142,000	**Beam Truss ST** For forming beams. Mounted on Truss Girder STT by means of pins and cotter pins.	**Complete with** 5 pc. 107579 Bolt Ø 25 x 154, galv. 6 pc. 105400 Bolt Ø 20 x 140, galv. 11 pc. 018060 Cotter Pin 4/1, galv. 4 pc. 029560 Bolt ISO 4014 M24 x 120-10.9, galv. 4 pc. 105032 Nut ISO 7042 M24-8, galv. **Note** For beams up to maximum 60 cm wide and 75 cm high.

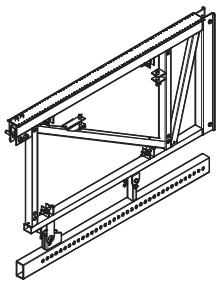

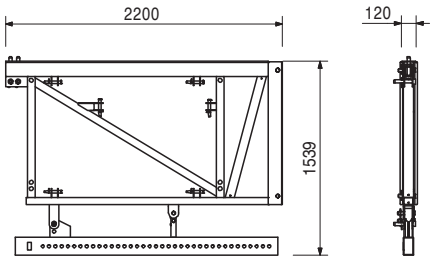

Item no.	Weight kg	
		Lifting Mechanism STM
111300	502,000	**Lifting Mechanism STM 600 V / 60 HZ**
113030	502,000	**Lifting Mechanism STM 480 V / 60 HZ**
114103	502,000	**Lifting Mechanism STM 400 V / 50 HZ**

For moving PERI SKYTABLE. With chain hoist and chains. Included in delivery is a accessories box with remote control, charger and documentation.

Complete with
1 pc. 107709 Lifting Head STH

Technical Data
Load capacity: 6.0 t
Max. table length: 24.40 m
Power: 0.9 – 3.5 KW
Chain speed: 1.6 m and 6.3 m/min.

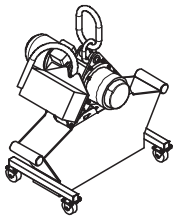

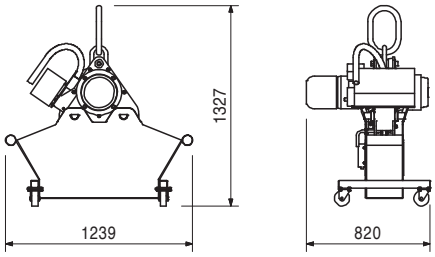

107736	26,900	**Chain Guidance Shoe STMS**

For fixing to the slab edge as chain guidance plate when moving.
Slab thickness 195 mm to 335 mm.

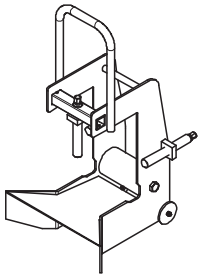

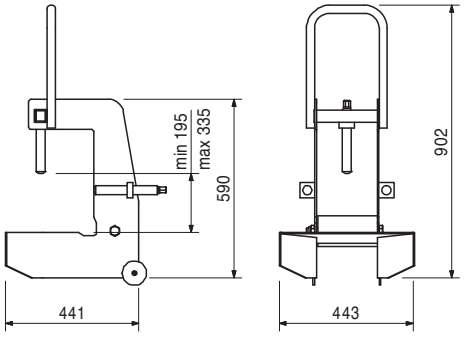

110153	32,600	**Chain Guidance Shoe STMS adjustable**

For fixing to the slab edge as chain guidance plate when moving.
Slab thickness 195 mm to 635 mm.

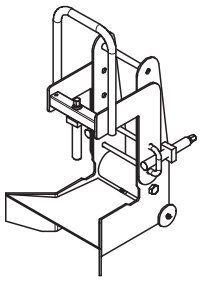

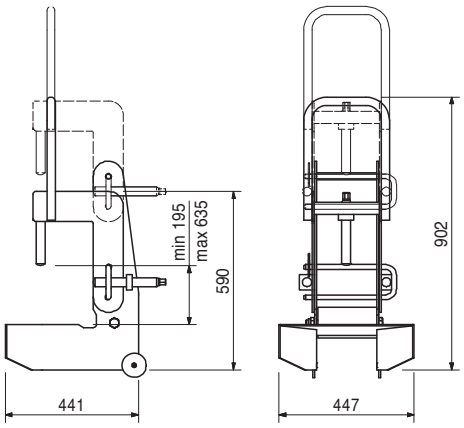

Item no.	Weight kg	
109388	95,400	**Spreader Beam STL 120-2** For moving PERI SKYTABLE with 2 shear frames.

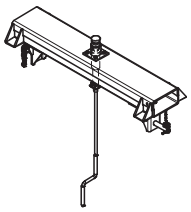

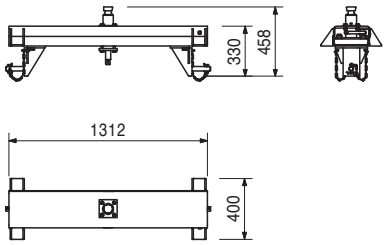

109373	167,000	**Spreader Beam STL 266/207-2** For moving PERI SKYTABLE with 2 shear frames.

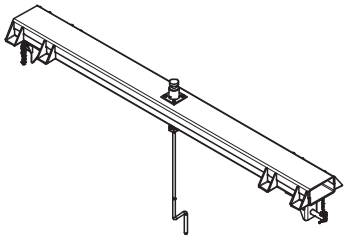

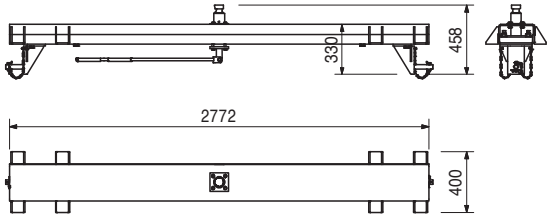

114740	16,400	**Lifting Traverse Crane Eye slidable ST** For moving excentrically-positioned SKYTABLE. Mounted to the Lifting Traverse STL.

Complete with
2 pc. 706462 Bolt ISO 4014 M20 x 200-8.8, galv.
2 pc. 781053 Nut ISO 7042 M20-8, galv.

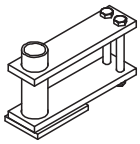

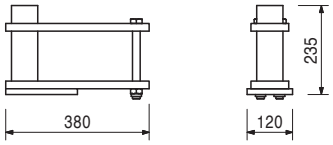

107895	1,430	**Tension Belt STLB** For fixing of Single Roller STE at SKYTABLE and for anchoring of slab tables.

Note
2 pieces required per Single Roller STE. (SKYTABLE)
Technical Data
Permissible tension force = 10 kN

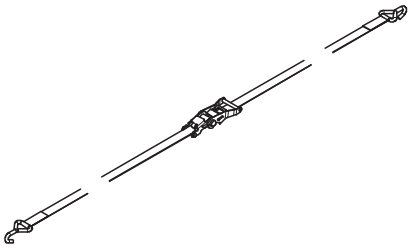

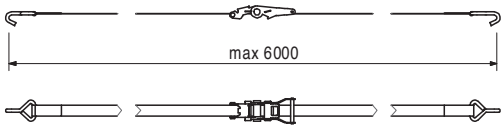

Item no.	Weight kg		
107709	10,700	**Lifting Head STH** For connecting the one chain end to the SKYTABLE at the rear area.	**Technical Data** The load carrying point is balanced according to the Lifting Mechanism STM and permissible SKYTABLE data.

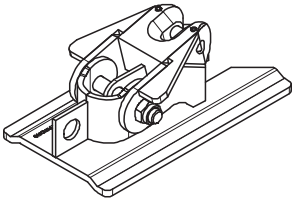

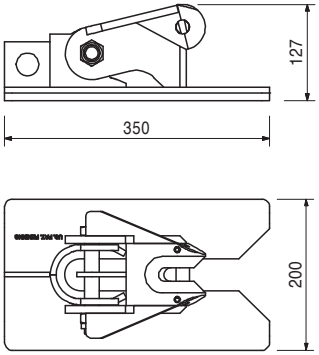

107602	111,000	**Rear Carriage STR 150** For travelling the PERI SKYTABLE when moving.	**Complete with** 4 pc. 109324 Tension Belt RS 4000, 6 m – 35 mm **Technical Data** Permissible tension force = 10 kN

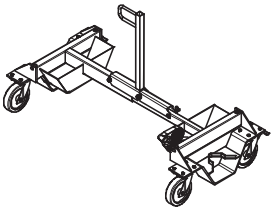

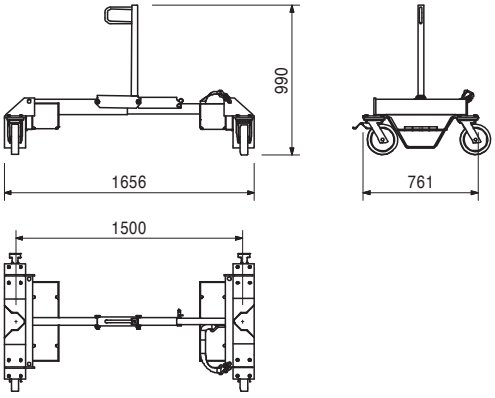

107569	124,000	**Rear Carriage STR 296/237** For travelling the PERI SKYTABLE when moving.	**Complete with** 4 pc. 109324 Tension Belt RS 4000, 6 m – 35 mm **Technical Data** Permissible tension force = 10 kN

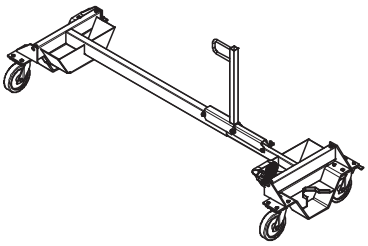

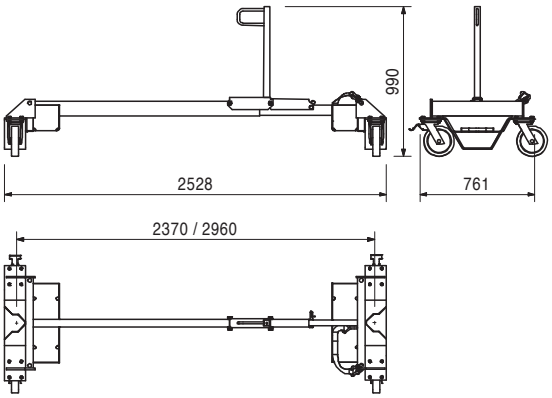

Item no.	Weight kg	
115476	49,900	**Triple Roller ST** For shifting the PERI SKYTABLE during the moving process.

Complete with
2 pc. 115215 Anchor Chain ST 3,0 kN, l = 2,50 m

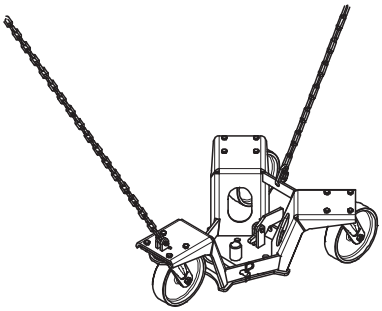

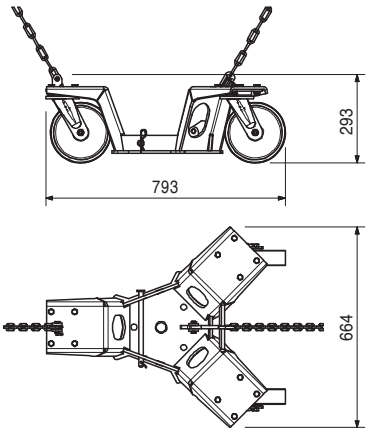

111778	22,200	**Single Roller STE** For travelling the PERI SKYTABLE when moving.

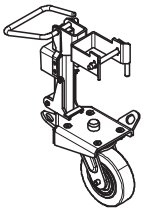

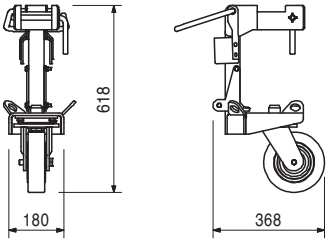

Accessories

107895	1,430	**Tension Belt STLB**

		Hydraulic Lowering Device STN
111698	45,600	**Hydraulic Lowering Device STN 2.0 t**
115021	68,800	**Hydraulic Lowering Device STN 6.0 t**
		For lowering the PERI SKYTABLE when moving.

Technical Data
Load capacitiy 2.0 t, resp. 6.0 t.

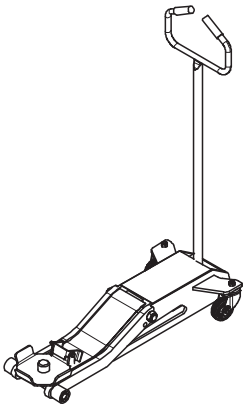

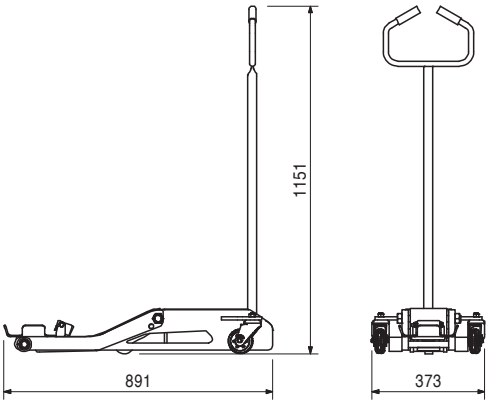

Item no.	Weight kg
115804	8,780

Chain Extension STV 120
For moving SKYTABLE tables with 3 truss girder sections in connection with the Lifting Carriage STM.

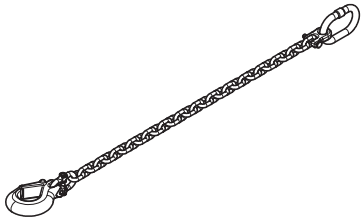

Technical Data
Chain length approx. 1.20 m.

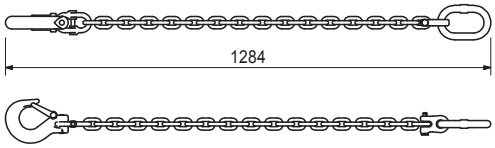

PERI International

01 Germany
PERI GmbH
Rudolf-Diesel-Strasse
89264 Weissenhorn
info@peri.com
www.peri.com

02 France
PERI S.A.S.
77109 Meaux Cedex
peri.sas@peri.fr
www.peri.fr

03 Switzerland
PERI AG
8472 Ohringen
info@peri.ch
www.peri.ch

04 Spain
PERI S.A.U.
28110 Algete - Madrid
info@peri.es
www.peri.es

05 Belgium/Luxembourg
N.V. PERI S.A.
1840 Londerzeel
info@peri.be
www.peri.be

06 Netherlands
PERI Holding B.V.
5480 AH-Schijndel
info@peri.nl
www.peri.nl

07 USA
PERI Formwork Systems, Inc.
Elkridge, MD 21075
info@peri-usa.com
www.peri-usa.com

08 Indonesia
PT Beton Perkasa Wijaksana
Jakarta 10210
bpw@betonperkasa.com
www.peri.com

09 Italy
PERI S.p.A.
20060 Basiano
info@peri.it
www.peri.it

10 Japan
PERI Japan K.K.
Tokyo 103-0015
info@perijapan.jp
www.perijapan.jp

11 United Kingdom/Ireland
PERI Ltd.
Rugby, CV23 0AN
info@peri.ltd.uk
www.peri.ltd.uk

12 Turkey
PERI Kalip ve Iskeleleri Sanayi
ve Ticaret Ltd.
Esenyurt / İstanbul 34510
info@peri.com.tr
www.peri.com.tr

13 Hungary
PERI Kft.
1181 Budapest
info@peri.hu
www.peri.hu

14 Malaysia
PERI Formwork Malaysia Sdn. Bhd.
43300 Seri Kembangan,
Selangor Darul Ehsan
info@perimalaysia.com
www.perimalaysia.com

15 Singapore
PERI ASIA Pte. Ltd
Singapore 387355
pha@periasia.com
www.periasia.com

16 Austria
PERI Ges.mbH
3134 Nußdorf ob der Traisen
office@peri.at
www.peri.at

17 Czech Republic
PERI spol. S r.o.
252 42 Jesenice u Prahy
info@peri.cz
www.peri.cz

18 Denmark
PERI Danmark A/S
2670 Greve
peri@peri.dk
www.peri.dk

19 Finland
PERI Suomi Ltd. Oy
05460 Hyvinkää
info@perisuomi.fi
www.perisuomi.fi

20 Norway
PERI Norge AS
3036 Drammen
info@peri.no
www.peri.no

21 Poland
PERI Polska Sp. z o.o.
05-860 Płochocin
info@peri.com.pl
www.peri.com.pl

22 Sweden
PERIform Sverige AB
30262 Halmstad
peri@periform.se
www.periform.se

23 Korea
PERI (Korea) Ltd.
Seoul 135-936
info@perikorea.com
www.perikorea.com

24 Portugal
Pericofragens Lda.
2790-326 Queijas
info@peri.pt
www.peri.pt

25 Argentina
PERI S.A.
B1625GPA Escobar – Bs. As.
info@peri.com.ar
www.peri.com.ar

26 Brazil
PERI Formas e
Escoramentos Ltda.
Vargem Grande Paulista – SP
info@peribrasil.com.br
www.peribrasil.com.br

27 Chile
PERI Chile Ltda.
Colina, Santiago de Chile
perichile@peri.cl
www.peri.cl

28 Romania
PERI România SRL
077015 Baloteşti
info@peri.ro
www.peri.ro

29 Slovania
PERI Agency
2000 Maribor
peri.slo@triera.net
www.peri.com

30 Slovakia
PERI spol. s. r.o.
903 01 Senec
info@peri.sk
www.peri.sk

31 Australia
PERI Australia Pty. Ltd.
Glendenning NSW 2761
info@periaus.com.au
www.periaus.com.au

32 Estonia
PERI AS
76406 Saku vald
Harjumaa
peri@peri.ee
www.peri.ee

33 Greece
PERI Hellas Solely Owned Ltd.
194 00 Koropi
info@perihellas.gr
www.perihellas.gr

34 Latvia
PERI SIA
2118 Salaspils novads, Rigas rajons
info@peri-latvija.lv
www.peri-latvija.lv

35 United Arab Emirates
PERI (L.L.C.)
Dubai U.A.E.
perillc@perime.com
www.perime.com

36 Canada
PERI Formwork Systems, Inc.
Bolton, ON – L7E 1K1
info@peri.ca
www.peri.ca

37 Lebanon
PERI Representative Office
90416 – Jdeideh
lebanon@peri.de
www.peri.com

38 Lithuania
PERI UAB
02300 Vilnius
info@peri.lt
www.peri.lt

39 Morocco
PERI S.A.U.
Tanger
peri25@menara.ma
www.peri.com

40 Israel
PERI Formwork
Engineering Ltd.
Rosh Ha'ayin, 48104
info@peri.co.il
www.peri.co.il

41 Bulgaria
PERI Bulgaria EOOD
1839 Sofia
peri.bulgaria@peri.bg
www.peri.bg

42 Iceland
Armar ehf.
220 Hafnarfjörður
armar@armar.is
www.armar.is

43 Kazakhstan
TOO PERI Kazakhstan
050000 Almaty
peri@peri.kz
www.peri.kz

44 Russian Federation
OOO PERI
142407, Noginsk District
moscow@peri.ru
www.peri.ru

45 South Africa
PERI (Pty) Ltd
7600 Stellenbosch
info@peri.co.za
www.peri.co.za

46 Ukraine
PERI Ukraina
07400 Brovary
peri@peri.ua
www.peri.ua

47 Egypt
Egypt Branch Office
11341 Nasr City /Cairo
info@peri.com.eg
www.peri.com.eg

48 Serbia
PERI – Oplate d.o.o.
22310 Šimanovci
office@peri.rs
www.peri.rs

49 Mexico
PERI Cimbras y Andamios,
S.A. de C.V.
Estado de México, Huehuetoca
info@peri.com.mx
www.peri.com.mx

50 Azerbaijan
PERI Repesentative Office
Baku
peribaku@peri.com.tr
www.peri.com.tr

51 Turkmenistan
PERI Kalıp ve İskeleleri
Aşgabat
ahmet.kadioglu@peri.com.tr
www.peri.com.tr

52 Belorussia
IOOO PERI Belarus
220100 Minsk
info@peri.by
www.peri.by

53 Croatia
PERI oplate i skele d.o.o.
10 250 Luöko-Zagreb
info@peri.com.hr
www.peri.com.hr

54 India
PERI (India) Pvt Ltd
Mumbai – 400064
info@peri.in
www.peri.in

55 Jordan
PERI GmbH - Jordan
11947 Amman
jordan@peri.com
www.peri.com

56 Kuwait
PERI Kuwait Company WLL
13011 Kuwait
kuwait@peri.com
www.peri.com

57 Saudi Arabia
PERI Saudi Arabia Com. Ltd.
21463 Jeddah
info@peri.com.sa
www.peri.com.sa

58 Qatar
PERI Qatar LLC
P.O.Box: 31295 - Doha
info@periqatar.com
www.periqatar.com

59 Algeria
Sarl PERI
Kouba 16092, Alger
info@peri.com
www.peri.com

60 Albania
PERI formwork and
scaffolding Sh.p.k.
Tirane
erti.hasanaj@peri.com.tr
www.peri.com.tr

61 Peru
PERI Peruana S.A.C.
Villa El Salvador, Lima
contacto@peri.com.pe
www.peri.com.pe

62 Panama
PERI Panama Inc.
0832-00155 Panama City
info@peri.com.pa
www.peri.com.pa

63 Angola
Pericofragens, Lda.
Luanda
renato.portugal@peri.pt
www.peri.pt

64 Nigeria
Heights Access Nigeria Ltd.
Victoria Island, Lagos
info@heightsaccessng.com
www. heightsaccessng.com

65 Oman
PERI (L.L.C.)
Muscat
perimct@perime.com
www.perime.com

66 Colombia
PERI S.A.S. Colombia
Chapinero Alto, Bogotá
peri.colombia@peri.com.co
www.peri.com.co

The optimal System for every Project and every Requirement


Wall Formwork


Column Formwork


Slab Formwork


Climbing Systems


Tunnel Formwork


Bridge Formwork


Shoring Systems


Construction Scaffold


Facade Scaffold


Industrial Scaffold


Access


Protection Scaffold

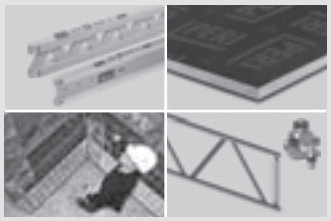
System-Independent Accessories


Services

DE en 01 | 2014 3ma 792460 © PERI GmbH

PERI GmbH
Formwork Scaffolding Engineering
P.O. Box 1264
89259 Weissenhorn
Germany
Tel. +49 (0)7309.950-0
Fax +49 (0)7309.951-0
info@peri.com
www.peri.com